INSTRUCTION MANUAL

Welding Controller
STN21 Series

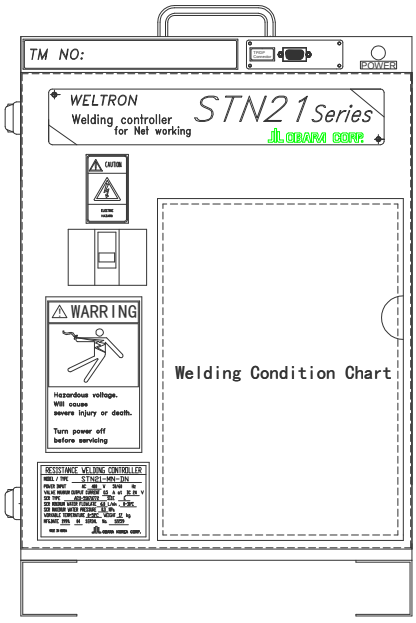

In order to ensure operational safety, you are requested to read this manual until you have fully understood the information contained in it. Keep this document the designated place

OBARA KOREA CORP.

Contents

= Safety Guide and Instructions = ... 4
1. BASIC SPECIFICATIONS 11
1.1 Model 11
1.2 Control functions 11
1.3 Inputs and outputs 12
1.4 Dimensions and weight 12
1.5 Equipment specifications 13
1.6 Accuracy 14
1.7 Paint color 14
1.8 Power indicator Lamp 14
1.9 Connection associated equipment 14
2. INSTALLATION AND CONNECTIONS 15
2.1 Installation 15
2.2 Connections (power, welding, transformer and cooling water) 16
2.3 Grounding wire 17
2.4 Connection of the PN/C cable 18
2.5 Connection of the control wires 19
2.6 TB1 Input / Output for Parameter setting “Remote I/O: ON” 22
2.7 Inputting Start Signal and Instructions 23
2.8 Step Clear 24
2.9 Step Select Clear 24
3. INITIAL POWER-ON PRECAUTIONS 25
3.1 Check items before power-on 25
3.2 Check items at power-on 25
3.3 Emergency stop 25
4. TP-NET OPERATION 26
4.1 Names and functions of controls 27
4.2 Notes on different modes 31
4.3 Operation monitor 32
4.4 Description of the welding conditions 33
4.5 Description of functions related to parameters 37
4.6 Initial operation of the TP 45
4.7 Setting and changing parameters 47
4.8 Setting and changing welding conditions 49
4.9 Copy and Verify functions for welding conditions 51
4.9.1 Using the FCP 52
4.9.2 Using the series copy function SCP 53
4.9.3 Using the group copy function GCP 54
4.10 Copy and Verify data between the timer and the TP 55
4.10.1 T → P 55
4.10.2 P → T 56
4.10.3 P → P 57
4.10.4 T ←→ P 58
4.11 Confirmation of the alarm history 59

4.12 Gun counter reset 59
4.13 Step reset 60
4.14 Step change 60
4.15 Checking the I/O information 61
4.16 Sequence of basic operation 63
5. DP-NET OPERATION 64
6. MAINTENANCE 65
6.1 Precautions for maintenance 65
7. TROUBLESHOOTING 66
8. ALARMS 74
8.1 Classification of the alarms 74
8.2 Settings associated with alarms 74
9. INSPECTION 80
10. STORGE 82
11. SPECIAL FUNCTIONS 83
11.1 Pulse Start 83
11.2 Pulsation 84
11.3 START SW Preferred function 84
11.4 Re-Weld function 85
11.5 Trans Diode Short 85
11.6 Current Detection function 86
11.7 Step Up control 87
11.7.1 Step Up control 87
11.7.2 Setting procedure for using the Step Up function 88
11.7.3 Step All Clear 89
11.7.4 Step Select Clear 89
11.7.5 Step Reset 89
11.7.6 Step Change 89
11.8 Linear Up control 90
11.8.1 Linear Up control 90
11.8.2 Setting procedure for using the linear Up function. 90
11.9 Variable Pressure (option) 91
11.9.1 Variable Pressure setting 91
11.9.2 Variable Pressure sequence 92
11.10 Pressure Selector 93
11.11 Weld Interlock 94
11.12 No Weld/Conti.Press 95
11.13 Device-Net (option) 98
11.14 PLURALITY OF UNIT 117
11.14.1 Connection of Plurality of Units 117
11.14.2 Installation of Plurality of Units 117
11.14.3 TP-Net Operation for Installation of Plurality of Units 117
11.14.4 Troubleshooting (When Plurality of Units Are Connected) 118

= Safety Guide and Instructions =

This instruction manual should be thoroughly read for safe and correct operation of this product.

- In order to ensure safety, only those persons who are qualified or well versed in welding machines shall be engaged in installation, maintenance and repairs.

- The operator of the equipment shall thoroughly understand the information contained in this manual, have sufficient technical knowledge, and be able to perform safety operation.

- As far as safety education is concerned, it is recommended that those concerned participate in various kinds of seminars and take qualification tests conducted under the auspices of the Welding Academy, Welding Association, and related organizations. Also, the owner is requested to educated the personnel in safety whenever considered necessary.

- Keep this manual at a place to which operators have easy access and leaf it through as many times as required.

- For further information, contact any of your local dealers whose phones and fax numbers are listed below.

Manufacturer	OBARA KOREA CORP
Head Office	535-158, Kasan-Dong, Keumchun-Ku, Seoul, Korea (153-803)
TEL	(02) 867-0171
FAX	(02) 867-6531

= Safety Precautions =

Before starting operation, thoroughly read this manual for safe and correct operation of this product.

- Precautions described in this manual are intended to ensure safe operation of the equipment and preclude the possibility of incurring injury to you and your co-workers.

- This product is designed and fabricated in due consideration of safety. However, it is essential that the precautions in this manual be taken. Failure to take such precautions may cause a fatal or serious injury.

- Incorrect operation of the equipment may cause different levels of hazards and damage. This instruction manual classifies these levels into the following two, which are represented by the corresponding symbols and terms and used to warn the operator against possible hazards and damage. These symbols and terms are also used in like manner on the warning labels affixed to the equipment.

Symbol	Term	Description
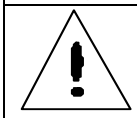	DANGER	Incorrect operation can cause hazardous condition which could result in a fatal or serious injury.
	CAUTION	Incorrect operation can cause hazardous condition which could result in a slight injury and which may only cause property damage.

※ Symbols apply to general cases of the operation.

The term serious injury means loss of sight, wound, burns (resulting from too high or low an ambient temperature), electric shock, fractures or poisoning that has aftereffects and requires medical treatment, hospitalization or seeing the physician for long periods as an outpatient.
The term slight injury means wound, burns or electric shock that does not require medical treatment, hospitalization or long-term treatment as an outpatient.
The term property damage means breakage of the property or consequential damage to the equipment.

As far as the handling of equipment is concerned, the matters related to “must” and “must not” are indicated below.

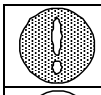	COMPULSORY	Must: e.g.., grounding connection
	PROHIBITED	Must not

※ Symbols apply to general cases of the operation.

Discouragement of operation by Certain Operators

For operational safety, discourage the following persons from performing operation:

DANGER

- Mentally-troubled person.
- Physically handicapped person who is hard to operate the equipment.
- Addicted to drugs.
- Intoxicated.
- With a pacemaker implanted.
- Without protective gears on.
- Not having undergone appropriate education or guidance and technically unqualified.
- With a long hair not bundled.

Education in Safety

The operator must not operate the equipment unless he or she:

CAUTION

- Understands the information contained in this manual.
- Understands the meaning of symbols and terms on the warning labels.
- Has knowledge of Learning heart massage and artificial respiration (CPR).
- Is capable of checking the protective equipment such as fire clothes.
- Knows the point of contact in an emergency.
- Has knowledge of first aid treatment for burns and injuries and the location of first aid kit.
- Has knowledge of the location and resetting method of the Emergency Stop switch.
- Is capable of inspecting the equipment.
- Has knowledge of electricity.
- Understands the equipment and knows it's wiring connections and voltage value; and.
- Has knowledge of resistance welding.

Safety Precautions to Be Taken

DANGER To avoid accidents resulting in a serious or fatal injury, be sure to observe the following:

1. This welding machine is designed and fabricated, giving due consideration to safety. However, it is essential that the precautions stated in this manual be taken. Failure to take such precautions may cause a fatal or serious injury.

2. Jobs related to the I/O power source; determination of the installation site; handling, storage and piping of high pressure gas; storage of products after welding; and disposal of wastes should be done according to the local regulations as well as your in-house standard.

3. Do not allow unauthorized persons to approach the welding machine or the workplace.

4. Do not allow a person with a pacemaker embedded in his or her body to approach the welding machine or the workplace without the approval from the physician. Since the welding machine creates magnetic field around it during operation, it can adversely affect the pacemaker.

5. For ensuring safety, the welding machine should be installed, serviced, and repaired by only qualified personnel or those who are familiar with it.

6. Also for ensuring safety, the welding machine should be operated by those who fully understand the information contained in this instruction manual and have knowledge and skills of safe operation.

7. Do not use the welding machine for any other purposes than welding.

DANGER To avoid an electric shock, be sure to observe the following:

* When brought into contact with live parts other than the secondary conductors, you may incur a fatal electric shock or burns.
* Remember that an electric shock can result from simultaneous contact with both ends of the secondary conductor.

1. Do not attempt to touch live parts other than the secondary conductors.
2. Refer grounding of the welding machine to a certified electrician or other qualified person in accordance with the regulations (Electrical Equipment Technical Standard).
3. When replacing a circuit board, fuse, or other parts or in cases where accidental contact with other high-voltage parts is probable, be sure to turn off the main circuit breaker and make sure that a lit charge lamp begins to dim and finally goes out.
   Make sure that the charge lamp remains unlit. Using a tester, also make sure that the unit is free of high voltage. Do not start installation or maintenance until it is certain that the unit is not charged with power.
4. Do not use damaged cables or those which have insufficient capacity or exposed conductors.
5. Ensure that cable connections are tightened and properly insulated.
6. Do not operate the welding machine with its casing or cover removed.
7. Avoid using a torn or wet pair of gloves. Always use dry, insulated gloves.
8. Perform inspection and maintenance periodically. Do not re-use the equipment until damaged portions, if any, have been properly repaired.
9. Cooling water to be used should have an electric resistance of not less than 5000Ω-CM and be free of sediments.
10. Electric cables and air and water hoses to be used should be sturdy enough to withstand the specified load and pressure.
11. When the tip changer is put out of use, the related equipment should be powered off.
12. Do not leave the doors of all units open unless they must be opened for inspection or maintenance service. Keep the doors locked during operation. Ask the responsible person for strict storage of keys.

DANGER

Do not try to put your fingers or hand between electrodes.

* Putting upper extremities of your body between electrodes Can cause them to be pinched or caught up, resulting in Fractures or other injuries.

1. Do not try to put your fingers, hand or arm between electrodes.

2. Before turning on the power (for solenoid valves) or supplying compressed air, ensure safety around the welding machine.

CAUTION

Use protective gears to protect you and your co-workers from splashes or spatters that are generated during welding job.

* Chips scattered will cause injury to the eyes or bums.

* Too loud a noise may cause hardness of hearing.

1. Wear safety goggles to protect the eyes from scattering chips.

2. Wear protective gears, including protective gloves, clothes with long sleeves and leather apron.

3. Install a protective curtain around the area surrounding the welding work site so that splashes and spatter are not projected towards other people.

4. Wear a sound-proof gear if noise is too loud.

CAUTION

To prevent a fire or an explosion, be sure to observe the following.

* Spatters from welding as well as base metal that is hot immediately after welding can cause a fire.

* Overheat that is caused by loose cable connections during current application can also start a fire.

1. Keep the job site clean of combustibles which easily ignite when brought into contact with spatters. If they cannot be removed, cover them with a sheet of nonflammable material.

2. Do not use the tip changer near the area where there are combustible gases.

3. Keep hot base metal away from combustibles.

4. Ensure that the cable connections are tightened and properly insulated.

5. Provide an extinguisher near the welding site in case of an emergency.

= Indication of hazardous zone =
= Type and location of warning label =

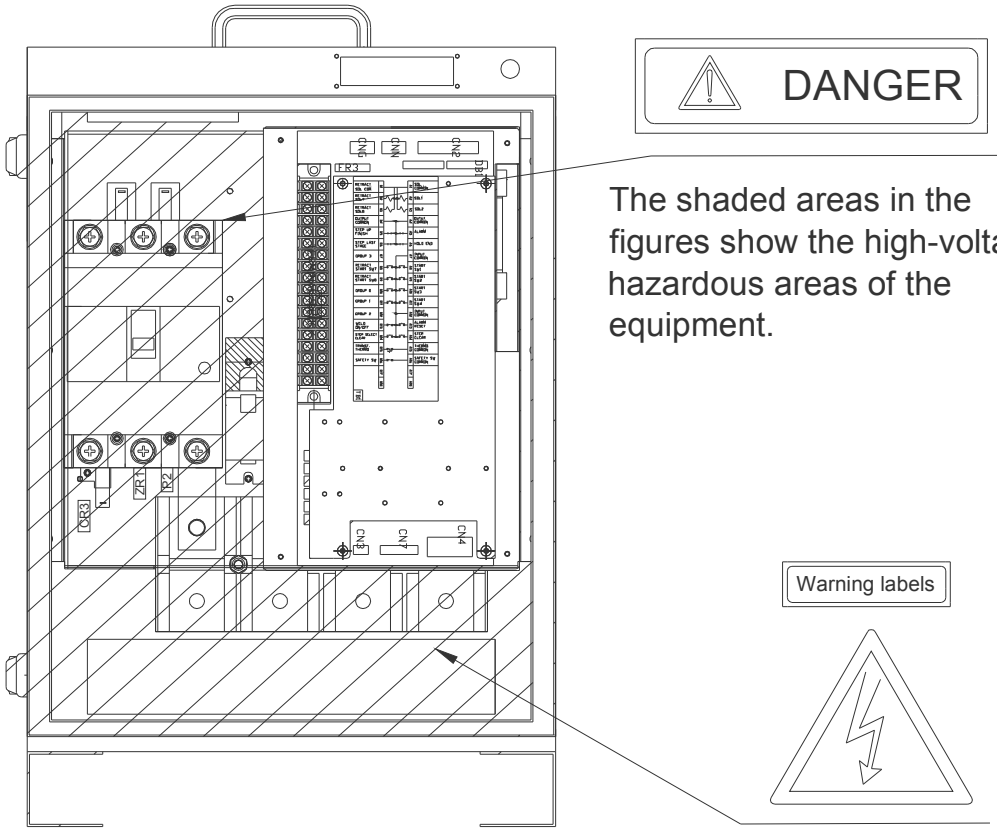

1. BASIC SPECIFICATIONS

1.1 Model

STN21Y Series

1.2 Control functions

Control method

All digital control, synchronous type

Control series

4 series/15 series/16 groups: Maximum control series: 240 conditions
Up to 8 guns (counter/Step Up control), or Up to 4 guns (solenoid control)
(combination of 2 guns and 2 retract guns can be controlled.)

Setting method

Remote setting method

Time control

Squeeze Delay Time	0 to 99 cyc (for all series)
Squeeze Time	1 to 99 cyc (for all series)
Slope Time	1 to 30 cyc (for all series)
Weld Time 1	0 to 99 cyc (for all series)
Cool Time 1	0 to 99 cyc (for all series)
Weld Time 2	0 to 99 cyc (for all series)
Down Slope Time	0 to 99 cyc (for all series)
Cool Time 2	0 to 99 cyc (for all series)
Weld Time 3	0 to 99 cyc (for all series)
Hold Time	1 to 99 cyc (for all series)
Off Time	4 to 99 cyc (for all series)
Pressure Rise Time 1	0 to 99 cyc (for all series)
Pressure Rise Time 2	0 to 99 cyc (for all series)
Pressure Rise Time 3	0 to 99 cyc (for all series)
Hold End Delay Time	0 to 99 cyc (for all series)

Cyclic control

Pulsation	1 ~ 9 (for all series)
Re-Conduction Count	1 (selectable using the parameter)

Current control

Constant current control method Primary current feedback by the CT

Current settings

Direct setting	2000A to 60000A (in 100A step)
Primary current setting	50 to 1500A (There is the restriction with duty)

Stepping control

Step Up system (up to 16 steps)
Maximum spot count: 9999

1.3 Inputs and outputs

Specifications for the solenoid valve 24 VDC
Rated current: 0.5A or less
(The total current of valve outputs should be 0.8A or less)
(A surge absorber must be provided on the solenoid valve side.)

Specifications for the control terminal block TB1

[Input]

Starting input	1N.O×4series (Internal: 24VDC, Input current: 20mA)	
or	4N.O×1series (Internal: 24VDC, Input current: 20mA)	
Group input	4N.O×1series (Internal: 24VDC, Input current: 20mA)	
Retract Starting input	1N.O×2series (Internal: 24VDC, Input current: 20mA)	
Step Select Clear input	1N.O×1series (Internal: 24VDC, Input current: 20mA)	
Step All clear input	1N.O×1series (Internal: 24VDC, Input current: 20mA)	
Alarm Reset input	1N.O×1series (Internal: 24VDC, Input current: 20mA)	
Welding On/Off Switch input	1N.O×1series (Internal: 24VDC, Input current: 20mA)	
Safety Switch input	1N.O×1series (Internal: 24VDC, Input current: 20mA)	
Transformer Thermo input	1N.O×1series (Internal: 24VDC, Input current: 20mA)	

[Output]

Hold End output	1 N.O×1series	(24VDC, Max current: 0.12A)
Alarm output	1 N.O/N.C×1series	(24VDC, Max current: 0.12A)
Last Step output	1 N.O×1series	(24VDC, Max current: 0.12A)
(Current Detection signal output)*		
Step Completion signal	1 N.O×1series	(24VDC, Max current: 0.12A)

*1: When the parameter "Pr CurDetect" is ON, the Last Step signal output changes to the Conduction Detect signal output. See Section "4.5 Description of parameter functions" for details.
*2: When the Device Net is used, there are some more inputs and outputs. See Section "11.15 Device Net" for details.

1.4 Dimensions and weight

Dimensions	Timer main unit: 350 (W) × 245 (D) × 520 (H)
Weight	19 Kg

1.5 Equipment specifications

Welding power	Single-phase, 200/220/380/400/420/440 VAC, 50/60Hz (Selected by switching the range on the base voltage.) Applicable voltage is ±20% of the preset voltage.
Power consumption	50 VA (not in weld)
Frequency	50 to 60 Hz (automatically selected on power-on)
Ambient temperature	0 ~ 50°C
Relative humidity	90% max (No condensation)
Cooling system	30°C max
Flow rate	6L/min
Masimum water pressure	0.3 MPa max.
Electric resistance	5000 Ω cm max.
SCR	Insulated molding SCR (SIZE : 717A, D type)
Storage period for setup data	10 년 (setting data)

⚠ CAUTION

Handling of the setup data

The storage period for the setup data is 10 years when the main unit is used in normal condition.
This period does not apply if any faults occur to the main board for some reason.
Therefore, the user is requested to ensure that important data on welding conditions is stored and managed at the user side independently of storage of the data in this equipment.

1.6 Accuracy

Welding power voltage fluctuations	±10% or less
Resistance load fluctuations	±10% or less
Setting accuracy	±3% (with respect to the full scale)
Repeatability	±3% (with respect to the full scale)

1.7 Paint color

Paint color of housing	Orange (Equivalent to the color number of E5-259)
Source	Standard print color sample card (1956 edition issued by the Japan Paint Industry Association)

1.8 Power indicator Lamp

Indication color	Green or White
Indication condition	ON when the Power ON (24VDC for Internal control is ON)

1.9 Connection associated equipment

This equipment has the following connection associated equipment.

TP-NET	For welding condition data input + Welding monitor + Alarm and other indications
DP-NET	Welding result monitor + Welding condition display + Alarm and other indications
PN/C (pendent cable)	TP-NET / DP-NET / SNS connection cable
PJ/C (timer cable)	Cable to connect timers.(Used for multi-unit setting option)
SMART-NET	Allows the welding conditions to be managed by a PC.

TP-NET

DP-NET

SMART-NET

2. INSTALLATION AND CONNECTIONS

2.1 Installation

(1) Weight 19Kg

(2) Dimensions 584mm (W) X 497mm (D) X 520mm (H)
584mm (W) X 525mm (D) X 520mm (H)

(3) Use the mounting holes (Φ11mm x 4 places) in the bottom of the main unit.

— Precautions for installation —

- Install the controller in a place where the ambient temperature is 0 to 40°C and it is not exposed to direct sunlight.
- Power receiving equipment that feeds the controller should be protected against lightning according to the local regulations.
- Avoid places where the unit is exposed to water splashes, oil drips or dust containing metallic particles.

– Space Requirement • Mainframe Bottom-side View –

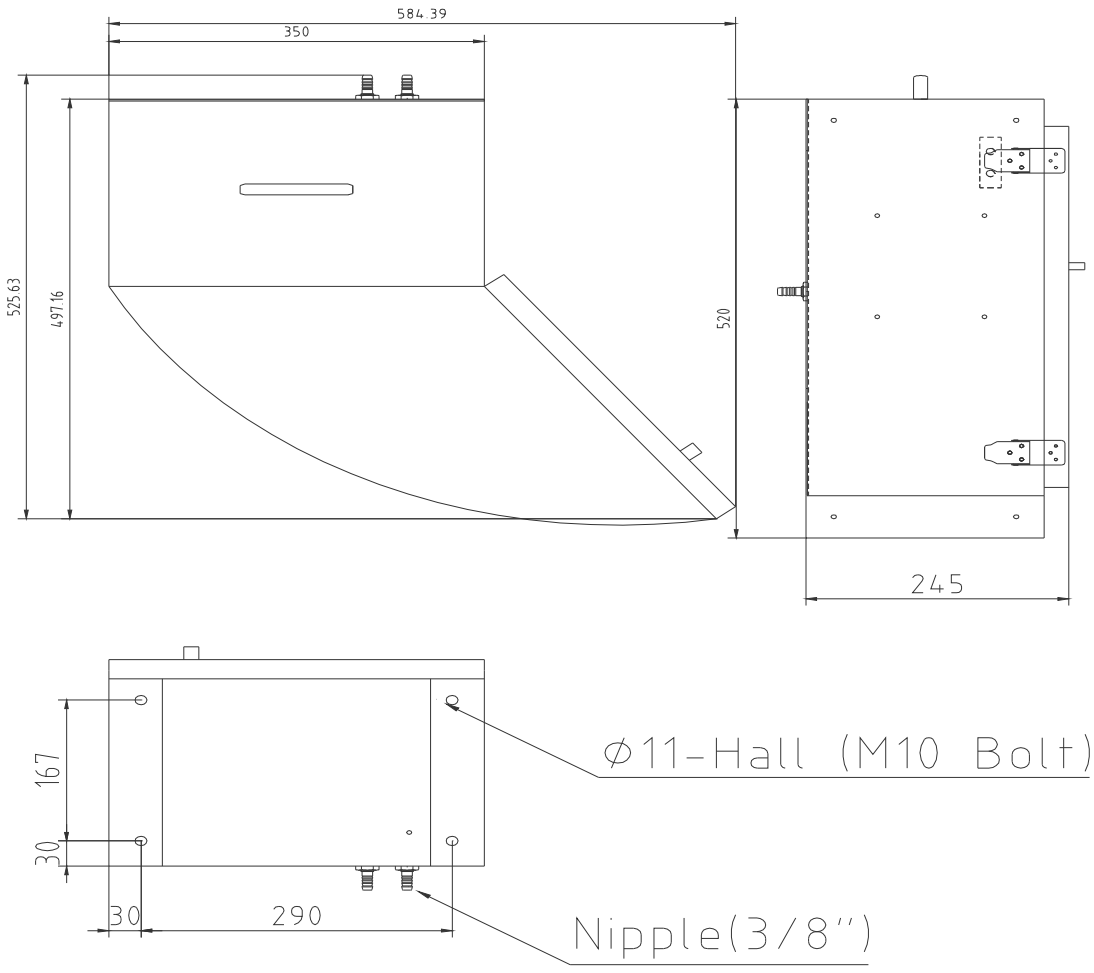

2.2 Connections (power, welding, transformer and cooling water)

Power cable : Connect it to "01-02" of the power connection terminal at the bottom of the controller.

Power transformer cable : Connect it to "01-03" of the power connection terminal at the bottom of the controller.

Cooling water supply and drain lines : Connect them to INLET and OUTLET on the left side of the main unit.

— Precaution for connections —

- Connection Cable : 100 mm^2 or larger in size (Refer to the following diagram.)
- Withstand voltage : 600VAC or more
- Power drop during conduction : Should be within 20% of the rated voltage
- Welding power : Be sure to install a fuse in the main power connection.
- Breaker : Install a high-frequency proof earth leakage breaker that can protect the human body on the power supply side of the controller in use.

Capacity of welding transformer	NFB Rated Current (AC380 to 440V)	Cable size
35 – 55 kVA	100A	38mm^2 or more
– 125 kVA	225A	60mm^2 or more
– 180 kVA	350A(400A frame)	100mm^2 or more

Note: Any Cable breaker that cannot deal with high frequencies will not protect the human body. (When in doubt, contact us.)

- Cooling water : Use city water or industrial water. Do not use cooling water that contains electrolytes such as salt.
  Circulated cooling water should be entirely changed twice a month or 5 to 10% of the total volume should be replaced continually (because of condensation by evaporation). Where water is frozen in winter season in your location, be sure to drain water before putting the unit out of service.

2.3 Grounding wire

- Grounding wire : Connect it to the “grounding connection terminal” in the lower part of the controller. (Refer to the following diagram.)
- Connection cable : 50mm^2 or larger in size (Larger than half the size of the power cable.)

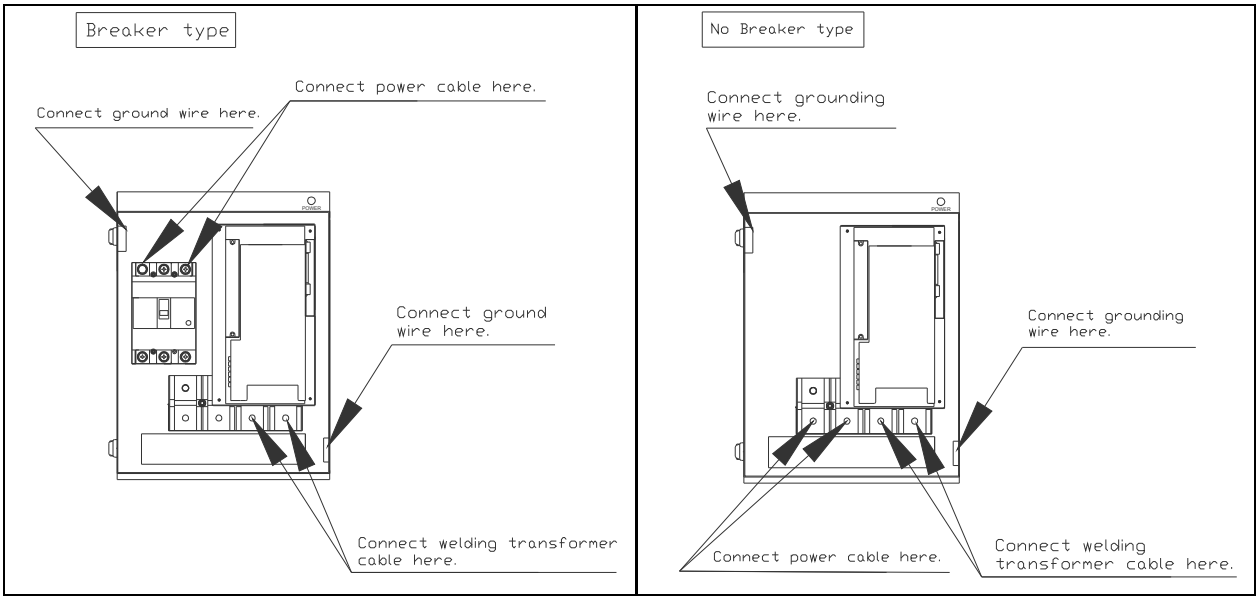

2.4 Connection of the PN/C cable

Connect the PN/C (TP-NET / DP-NET / SNS) cable to the TP connector of the timer main unit.

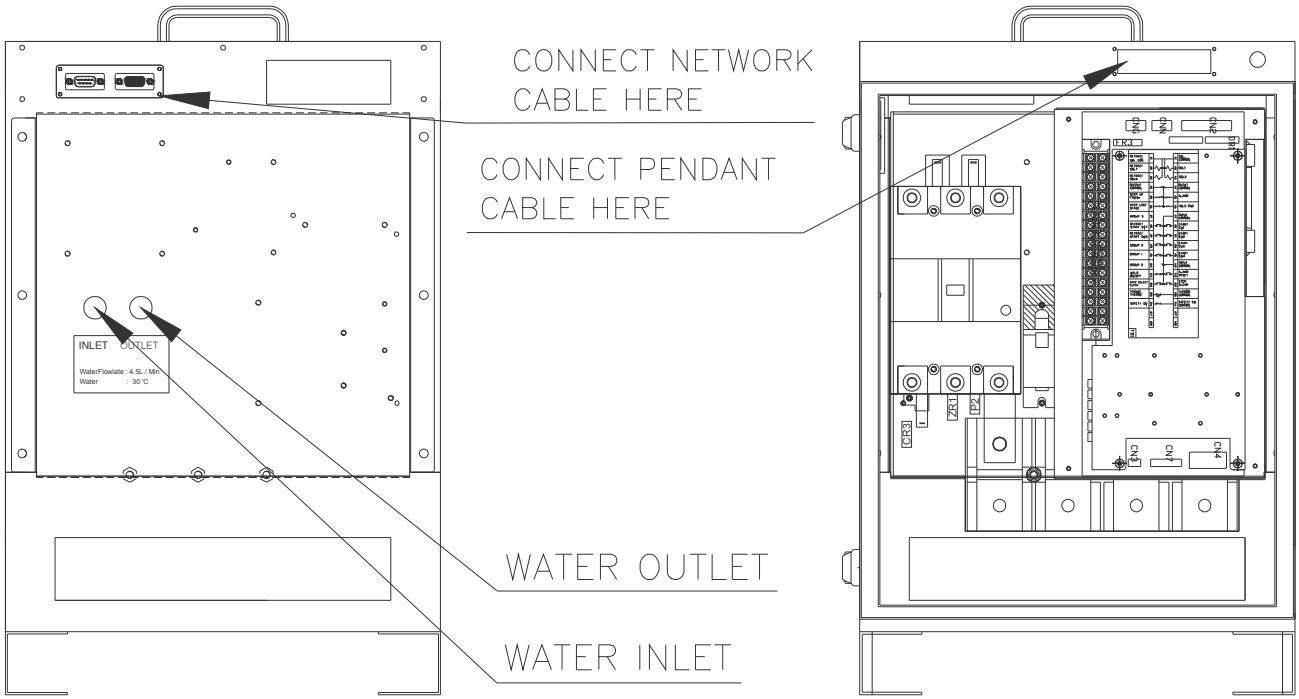

2.5 Connection of the control wires

Connect the terminal block TB1 on the front of the main unit.(See the instruction on the seat.)

	Connection item	Description
Output	SOL1 and 2	Outputs a signal to each of the solenoid valves of GUN1 and GUN2.
	SOL7 and 8	Outputs a signal to the retract valves. Can also be used as outputs to the GUN3 and GUN4 solenoid valves.
	Alarm output	Output an alarm signal on occurrence of fatal or warning(caution) alarms. Related parameters: "Caution"," TESTW ALM","ALM Mode","ALM Out"
	Step Up Finish Output	Outputs a signal on completion of the specified steps in the Step-up function.
	Last Step output (Current Detection signal output)	Outputted upon switching to the last step order. However, this signal Is turned into the Conduction Detect signal output when the parameter "CurDetect" is ON.
	Hold End	Output of Hold End signal to each spot. When an alarm is found, Whether this signal is outputted or not depends on the alarm that has occurred. Related parameters : "Hold Out", "HoldA Dly"
Input	GROUP 0~3	Binary input of Groups 0~3 specifies the welding conditions in Groups 0~15
	START SW 1~4	1. Activation inputs. Can be used to specify up to 240 welding conditions in conjunction with groups 0~3 (15 conditions * 16groups=240 conditions) 2. When the Step Select Clear signal and an START SW signal are inputted at the same time, the specified GUN's step is reset. Related parameters: "AB Mode", "SW Mode", "One Shoot"
	RETRACT START SW 7, 8	An input to start the Retract function.
	ALARM RESET	Short-circuiting this will reset a currently issued alarm.
	WELD ON/OFF	A Switch to externally operate/stop the welding. Since N.C.(weld able at the closed position) is set, shorting between A12 and B13 is required when it is not in use.
	STEP CLEAR	Clears the Step-up data of up to GUN8
	STEP SELECT CLEAR	Inputting this signal and the Start SW simultaneously will specify a gun number and clears its Step data. See Section "4.13 Step resetting" for details.
	TRANS. THERMO	This input connects the thermo wire from the welding transformer. N.C.(normally closed)
	SAFETY SW	Switch to stop the timer in an emergency and used for other purposes. N.C.(operative at the closed position)

Connect Example of Robot control Board

Condition: B Mode (binary switch input) Step control is enable.

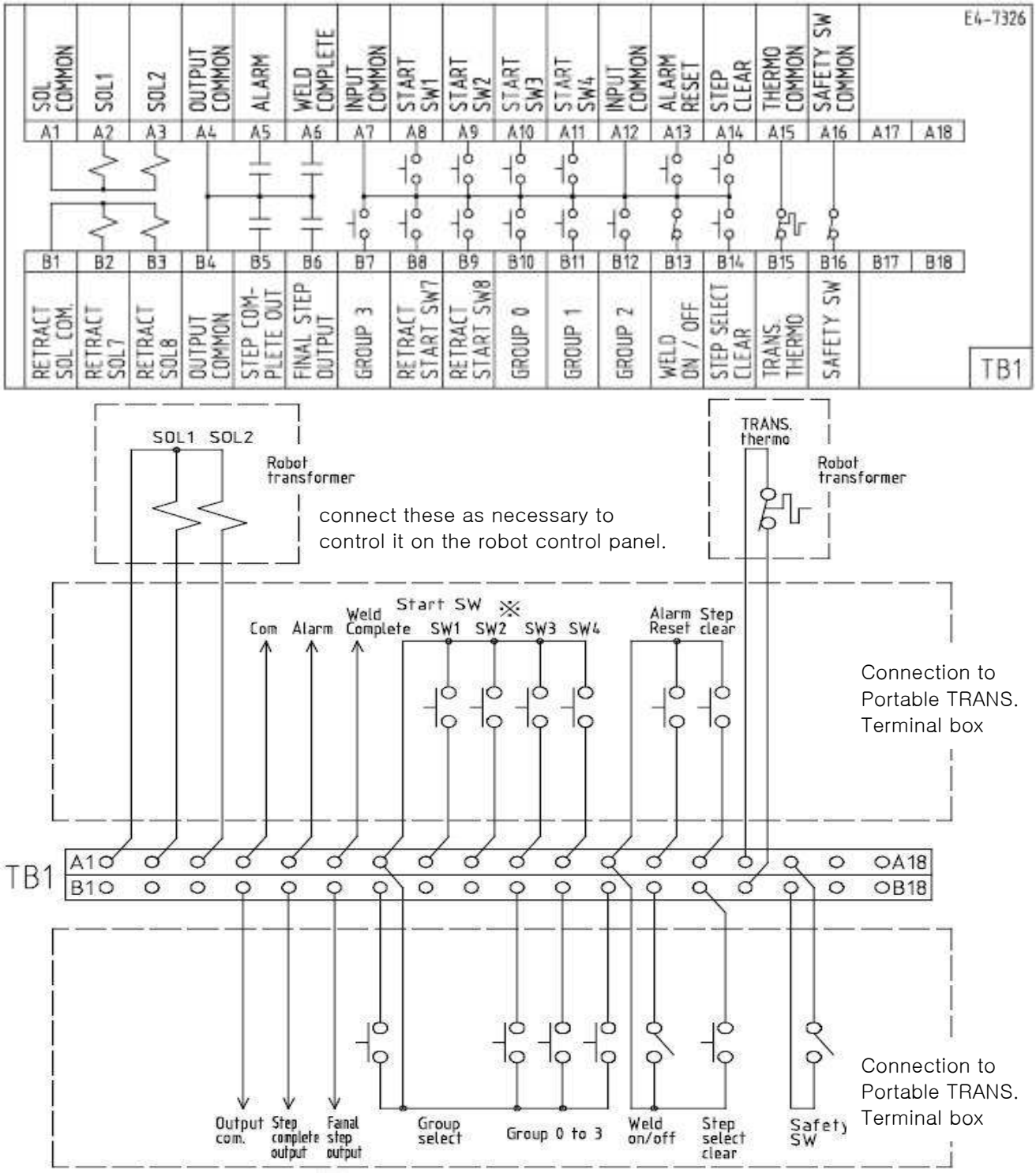

※ 1: Refer to Section, 2.7 “Inputting Start Switch and Instructions”.

※ 2: The step last stage signal output works instead of current detection signal output when the Parameter is effective.

Connection Example of Portable Transformer

Condition: Selectable between A-Mode and 1 retracted gun

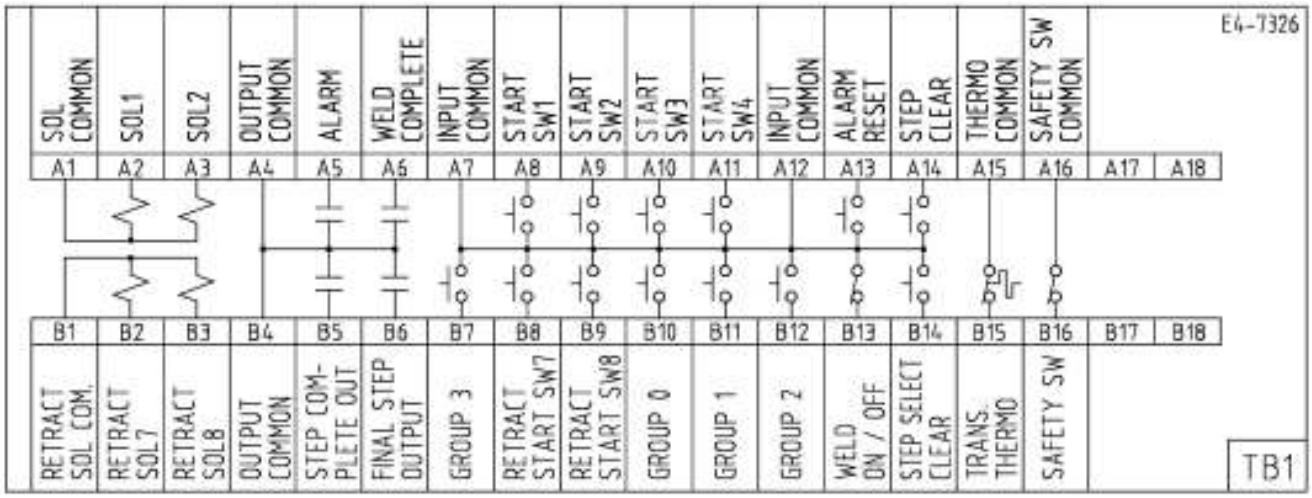

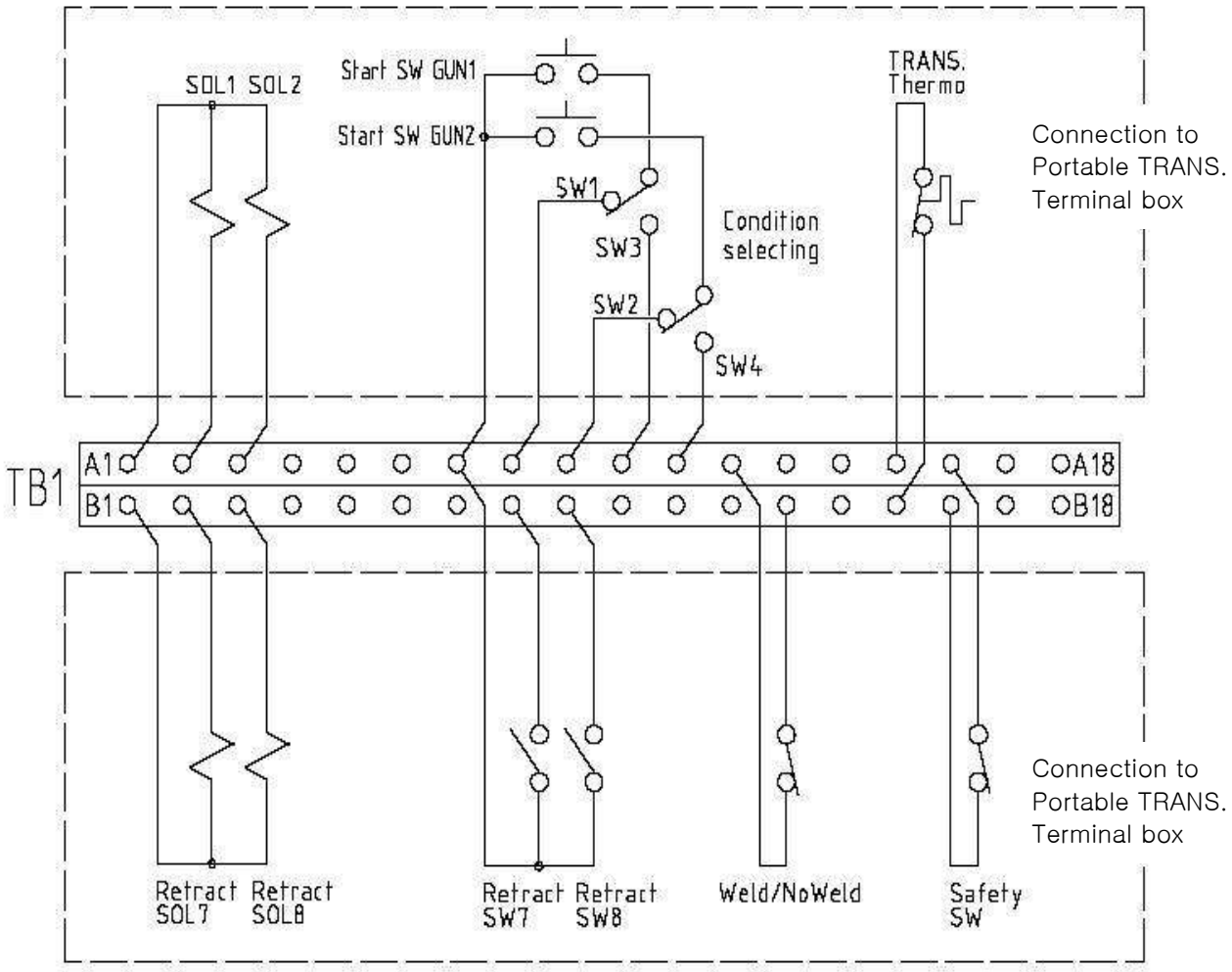

2.6 TB1 Input / Output for Parameter setting “Remote I/O: ON”

Each input and Output item became DeviceNet I/O at the time of the “Remote I/O: ON” choice. Refer to the bottom table for the details.

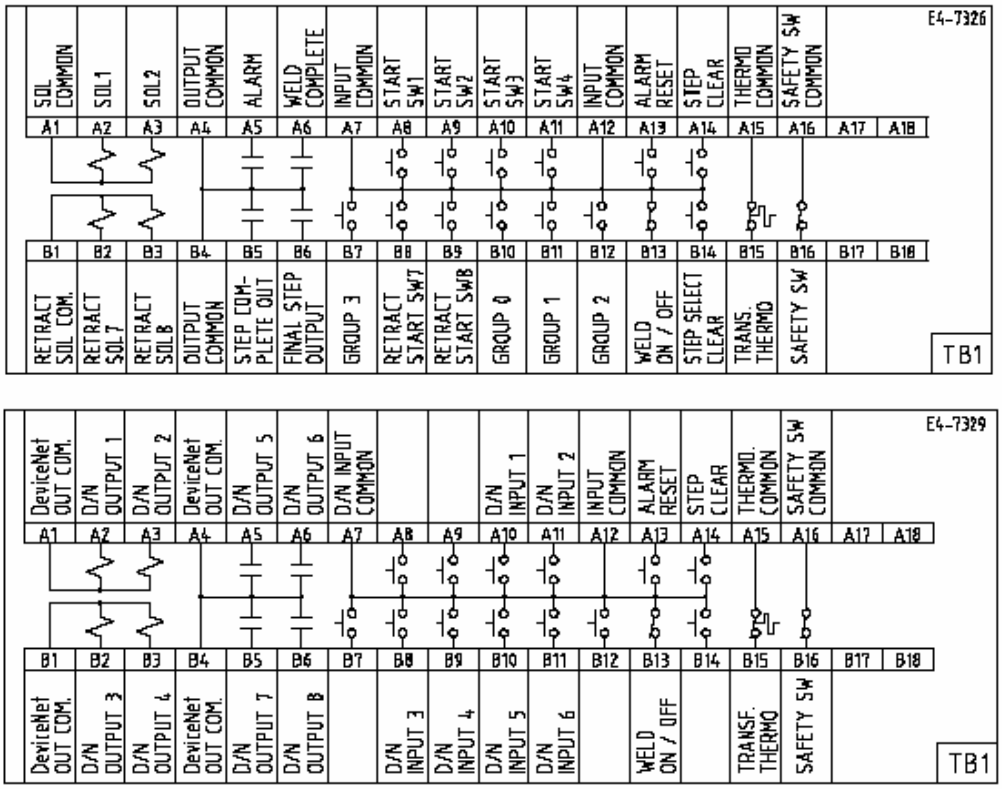

Table of TB1 item

TB1	Stnadard
D/N Output 1 to 4	-COMMON DC24V output
D/N Output 5 to 8	relay contact output
D/N Input 1 to 6	relay contact input
Alarm reset	Short-circuiting this will reset a currently issued alarm.
Weld On/Off	A switch to externally operate/stop the welding. N.C. (Closed in possible for welding)
Step clear	Clears the Step-up data of up to GUN8.
Transf. Thermo	Connection of the thermostat wire of the welding transformer. N.C (Closed in normal state).
Safety SW	A Switch to stop the timer in case of emergency. N.C. (Activates when closed.)

2.7 Inputting Start Signal and Instructions

When connecting the Activation signal, connect the signal to the Activation switches (1 to 4) and Groups (0 to 3).

Inputting Start Switch Signal:

Setting the parameters on the timer allows you to select A MODE (4 series) and B MODE (15 series).

A MODE (1 ~4: 4 series) 1 group

	Series 1	Series 2	Series 3	Series 4
START SW 1	O	×	×	×
START SW 2	×	O	×	×
START SW 3	×	×	O	×
START SW 4	×	×	×	O

B MODE (1~F: 15 series) 1 group

	1	2	3	4	5	6	7	8	9	A	B	C	D	E	F
START SW 1	O	×	O	×	O	×	O	×	O	×	O	×	O	×	O
START SW 2	×	O	O	×	×	O	O	×	×	O	O	×	×	O	O
START SW 3	×	×	×	O	O	O	O	×	×	×	×	O	O	O	O
START SW 4	×	×	×	×	×	×	×	O	O	O	O	O	O	O	O

Group input :
All the series, when put together, are called a group. There are 16 different groups consisting of Group 0 to Group F. Each group is specified by a binary input. As shown in the table below, no group input denotes Group 0.
Group selection (0 ~ F: 16 groups)

Group	0	1	2	3	4	5	6	7	8	9	A	B	C	D	E	F
Group 0	×	O	×	O	×	O	×	O	×	O	×	O	×	O	×	O
Group 1	×	×	O	O	×	×	O	O	×	×	O	O	×	×	O	O
Group 2	×	×	×	×	O	O	O	O	×	×	×	×	O	O	O	O
Group 3	×	×	×	×	×	×	×	×	O	O	O	O	O	O	O	O

Maximum number of conditions = 15 series X 16 groups = 240 conditions

Inputting Instructions of Start Signal
In B-Mode, a long interval between activation of each Start switches may select a wrong Series. Keep the intervals between activation of each Start switch tithing 5ms. Alternatively, the following method is available.

- Example of Start Switch Input -
At first, close the relays, CR1~8, and then close the contact, CR0, after CR0 short interval.
This method of closing the contact, CR0, after closing the six relays poses no problem if the differences in closing timing of the relays are moderate.

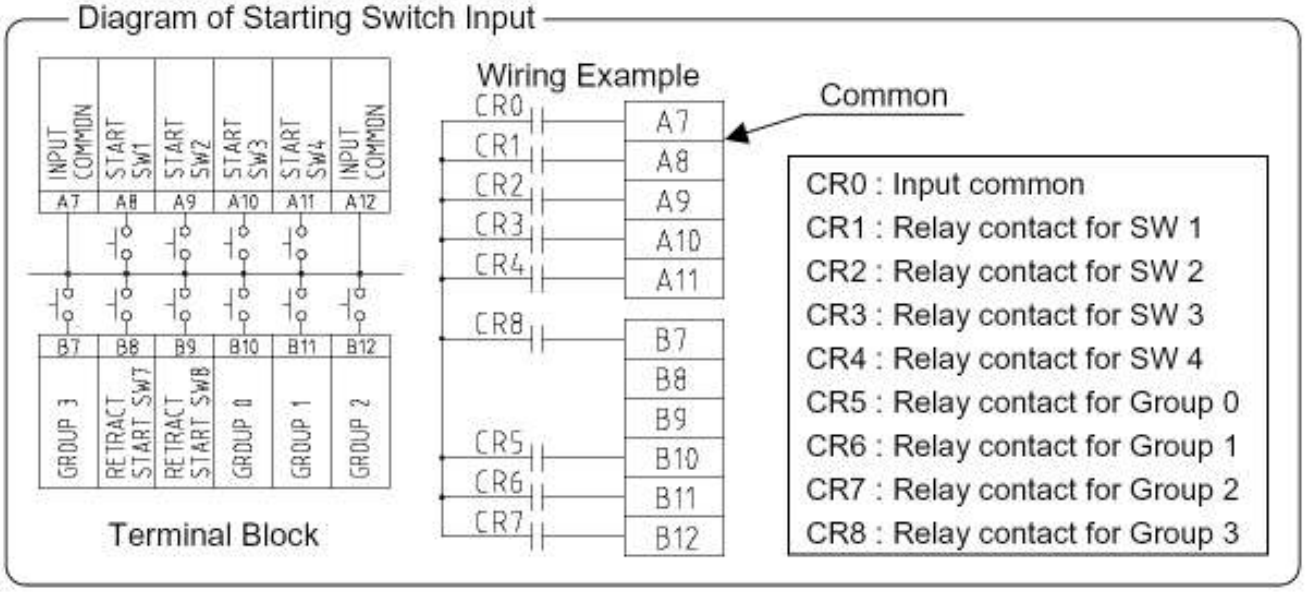

2.8 Step Clear

If the step up function is being used, then inputting a step clear signal to the TB1 terminal block will clear the gun step conditions.
(Note) When the parameter "Ps" and "P8" are both enable, step series1 only can be cleared by this input signal (TB1-A14)

2.9 Step Select Clear

Inputting a signal to Step select clear and Start switch on the TB1 terminal block at the same time allows a gun number to be specified and its step data to be reset. And Step select clear follows the data established in Step return (Welding condition).

How to specify the GUN No.
In A Mode
Gun 1 STEP SELECT CLEAR+INPUT COMMON+START SW1
Gun 2 STEP SELECT CLEAR+INPUT COMMON+START SW2
Gun 3 STEP SELECT CLEAR+INPUT COMMON+START SW3
Gun 4 STEP SELECT CLEAR+INPUT COMMON+START SW4
In B Mode (binary input)
Gun 1 STEP SELECT CLEAR+INPUT COMMON+START SW1
Gun 2 STEP SELECT CLEAR+INPUT COMMON+START SW2
Gun 3 STEP SELECT CLEAR+INPUT COMMON+START SW1+ START SW2
Gun 4 STEP SELECT CLEAR+INPUT COMMON+START SW3

3. INITIAL POWER-ON PRECAUTIONS

3.1 Check items before power-on

Before turning on the power, check the following items to ensure that there are no incorrect connections.

1. Connection of the power cable
2. Connection to the welding transformer.
3. Connection of the grounding wire.
4. Connection or the control line.
5. Check on the cooling water line and flow rate.

3.2 Check items at power-on

When turning on the power:

1. Wear safety goggles and insulated gloves.
2. Immediately after the power is turned on, check for unusual noise or smoke or peculiar odor.
3. Make sure that there is no alarm indication on the TP-NET. If an alarm is indicated, take appropriate corrective action against it referring to Section "9. INSPECTION".
4. After the power is turned on, check for unusual noise or smoke or peculiar odor.
5. Set the welding condition data as well as parameter data referring to Section "4. TP-NET OPERATION".
6. Use the START SW to start the equipment and make sure that the welding guns are pressurized depending on the activation series

3.3 Emergency stop

Opening the signal circuit of the "**Safety Switch**" on the TB1 terminal block allows you to stop any valve outputs from the timer and to cut off the welding current in an emergency. The stopping method depends on the external connections. The personnel responsible for system configuration should select the emergency stop function according to the situations.

4. TP-NET OPERATION

Each timer can have data on 240 welding conditions and one set of parameter data.
The TP-NET can have data held by five (5) units of this timer.
Simply, the TP-NET can have as many as 1200 welding conditions.

Description of operations from the TP-NET (teaching pendant):

Welding result monitor
Check on and change of the parameters
Check on and change of the welding conditions
Check on I/O information (BIT information)
Alarm indication and check on its history
Spot count and reset
Step order count, reset and change
Copy of compare between TM and TP
Copy of the internal data of TP

Description of terms:

Welding result monitor·····	Results of the previous welding.
Welding conditions·····	The current value, welding time and other condition can be set as per the customer's needs
Parameters·····	The function can be selected as required by the customer. (Repeat, Step up and other functions)

4.1 Names and functions of controls

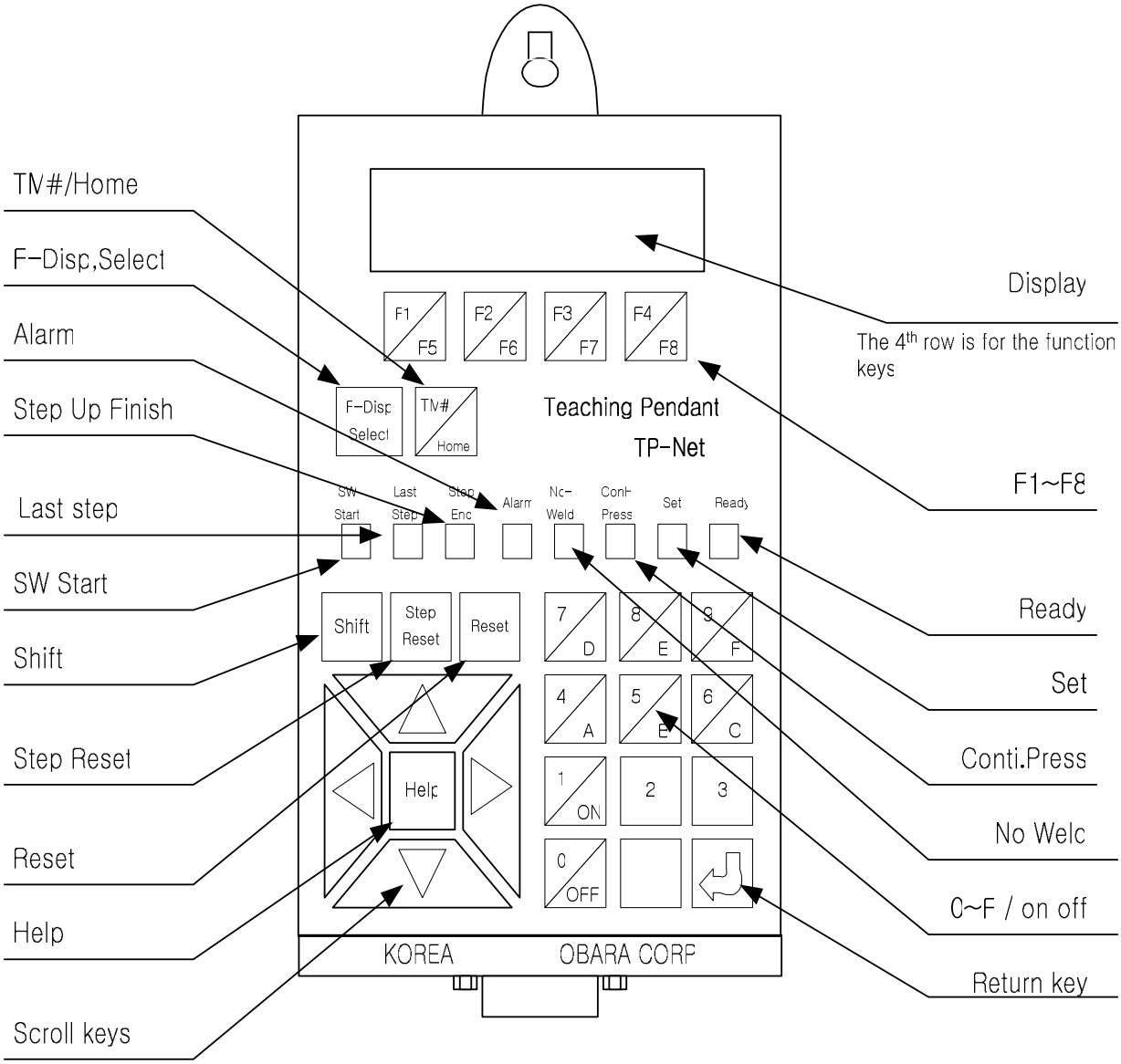

Names of control buttons on the control panel

Button name	Description of function and operation
F1~F4 /F5~F8	Selects menu button (function key). Pressing Shift + a function selects any one of F5 to F8. F8 key is dedicated to the return function.
F-Disp Select	Determines whether a description should be displayed or cleared on the bottom line of the display screen.
0~9 & "." /A~F /ON & OFF	Ten-key pad to input data. A to F are selected by pressing Shift +4 to 9. ON and OFF are selected without pressing Shift. ON = "1" and OFF = "0".
TM# /Home	- Short-cut button to return to the initial display screen. - Used for display and edit of the currently connected TM#. Menu button to select the timer No. to be monitored. - Pressing Shift + TM#/Home calls up the mode in which the timer No. to be edited is selected.
Step Reset	Clears the step value when the step function is enabled.
Reset	- Resets an alarm that has occurred. - Clears the gun spot count when the welding spot count is indicated. (Gun No. is displayed on the top of the screen.) - Clears the alarm history when it is displayed or suspends other operations.
↑←→↓	Selects scroll direction for the displayed function.
Help	Calls up a help that explains the function letters and details.
Shift	Auxiliary button to select F5 to F8 and A to F.

Names of indicator lamps (Status display of the controller)

Indicator name	Description of status display
Ready	Illuminates when TP-NET has finished initialization, acquired initial data via communication and gone into the standby state waiting for data input.
No Weld	Indicates that the timer controller is in No Weld mode.
Conti.Press	Indicates that the timer controller is in No Weld mode and the gun-pressure control is in continuous pressurization mode.
Set	Indicates that the timer controller is in data setting mode.
SW Start	Indicates that the Start switch in the timer controller is turned on.
Step last stage	Indicates that the timer controller has entered the final step.
Step up finish	Indicates that the timer controller has entered the step end phase.
Alarm	Indicates that the timer controller has detected trouble.

Description of the function key items

The screen is selected by pressing any of function keys (F1 to F8) as shown below:

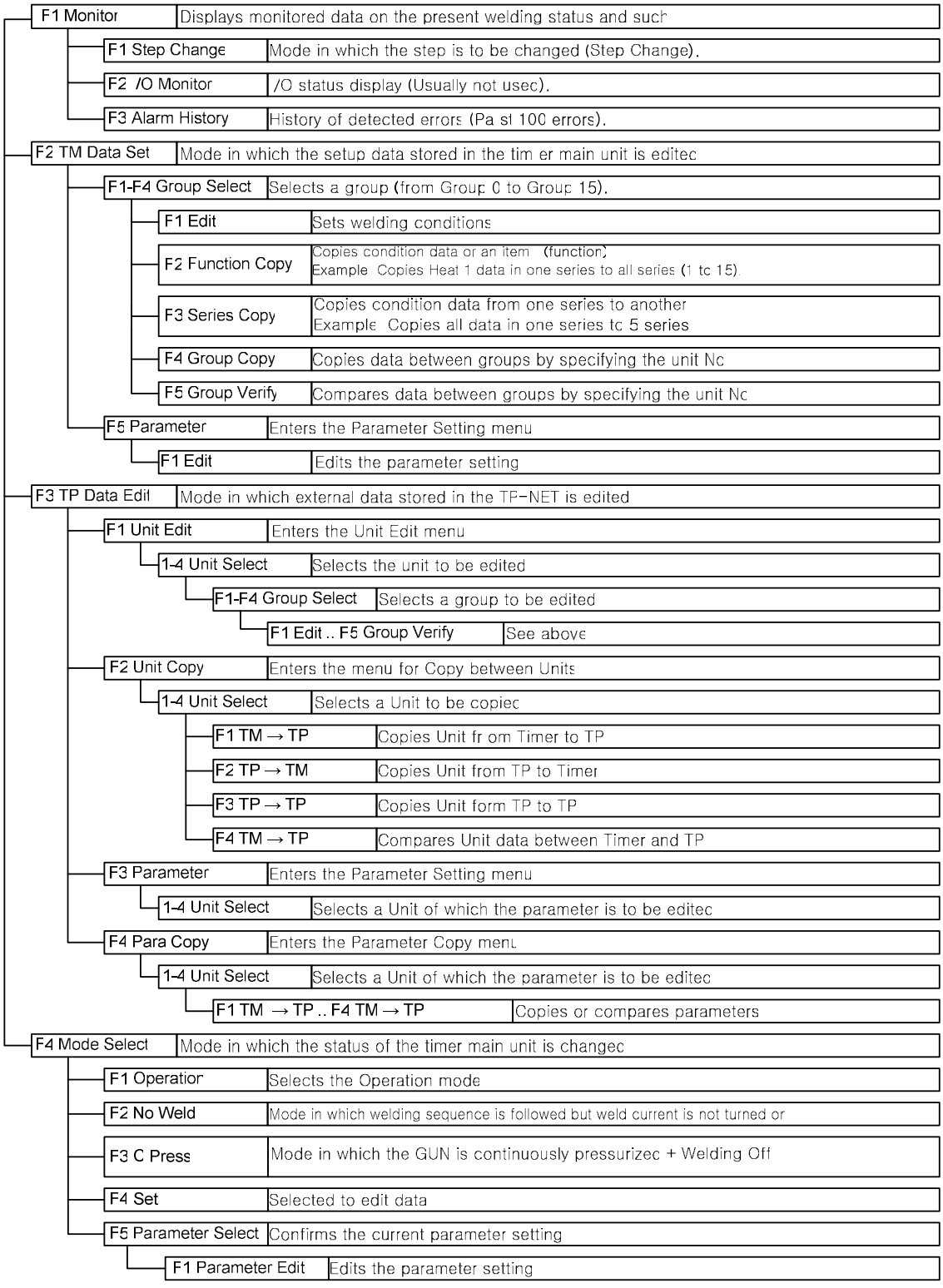

Internal image of TP

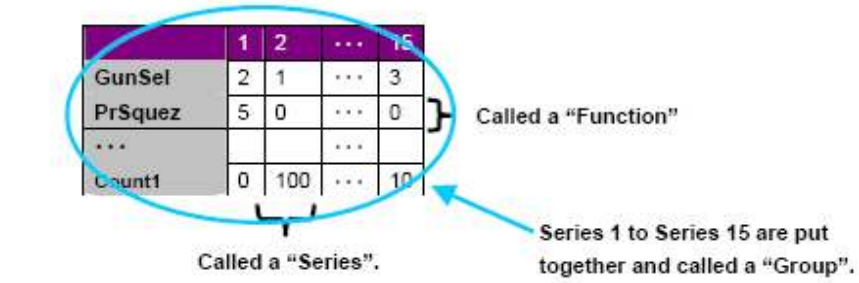

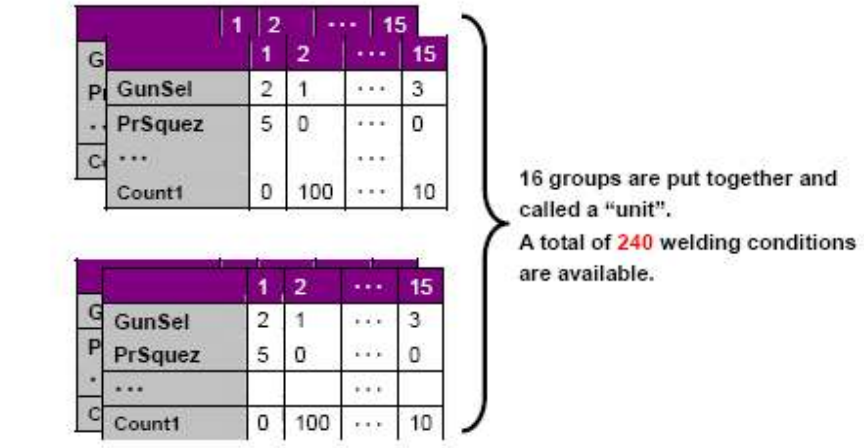

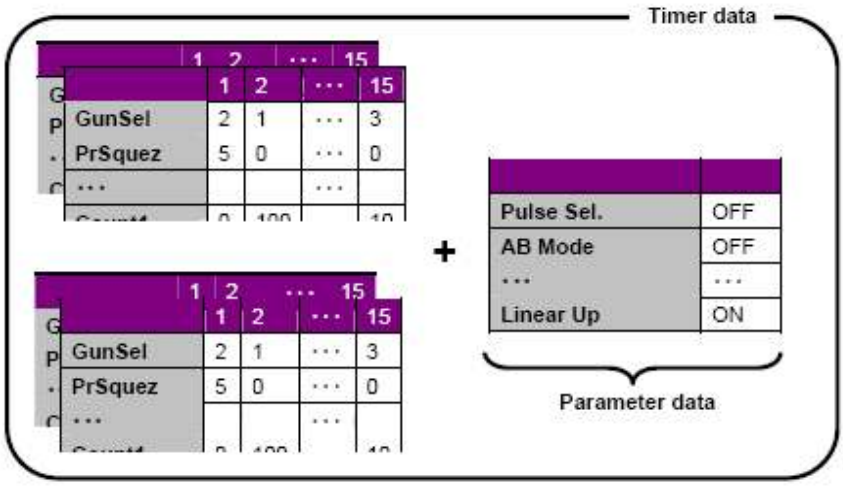

The timer contains data on one unit and parameter data.
TP-NET can contain and hold information on 5 units of the timer.
A total of 1200 welding conditions can be in the TP-NET

4.2 Notes on different modes

As mentioned in Section 4.1, different modes can be selected by using the function Keys on the TP-NET.

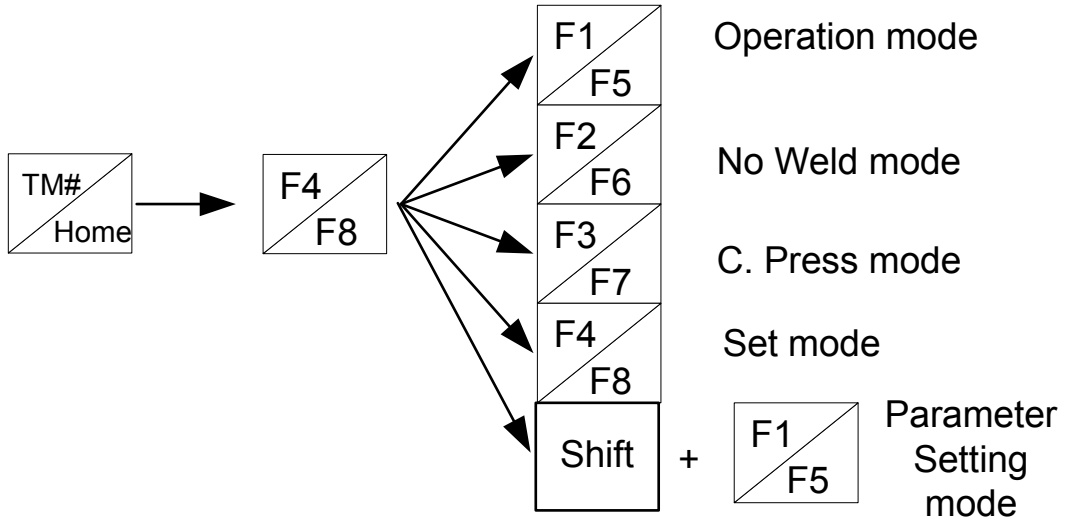

Operation Mode	Calls up the Operation mode. Welding data cannot be changed in this mode.
No-weld Mode	Checks mode in which the setup sequence is followed without applying the welding current. See Section "11.12 No Weld/ Conti. Press." for further details.
C.Press Mode	Provides SOL output with START SW set to ON. See Section "11.12 No Weld/ Conti. Press." for further details.
Set Mode	Makes changes to welding conditions when the Setup mode is entered. Conduction is also allowed.
Parameter Setting mode	Calls up the mode for parameter setting.

Caution

When changing welding conditions or parameter settings, be sure to check that The "Set" indicator is illuminated among the timer status indicator lamps of the TP-NET. If you attempt to change any condition setting without entering the Set mode, an operational error will be indicated.

4.3 Operation monitor

The operation monitor is mode A in which the user checks the operation status and controls the gun counter and step data

Display screen of the operation monitor

Gun1	10
Gun2	1580
Gun3	16230
Gun4	17000
Gun5	33
Gun6	33
Gun7	1234
Gun8	2000
1-Step 1	10
2-Step 12	123
3-Step Up	300
4-Step Up Finish	1200
5-Step Up	300
6-Step Up	250
7-Step Up	100
8-Step Up	50
B3F-5 W.Cycle	10cyc
C.Flow 68%	68%
Set Curr.	10.5KA
Total Curr	10.5KA
Heat1	13.0KA
Heat2	9.0KA
Heat3	10.0KA
Peak Current	13.4KA
Line Voltage	410V

Name	Function
Gun Counter	Total spot counts for each of Guns 1 to 8.
Step Data	The first digit represents the gun No. The subsequent digits represent the gun's step order, spot count and state atthat step.
Operation Data	B3F-5 Indicates the last selected Activation series. B: Indication of A or B mode. 3: Represents a group (0 to F). F: Start series (1 to F). W.Cycle: Cycle time for each conduction. 5: Selected gun series. Current flow: Flow ratio.
Set Current	Indicates the average of the set current values.
Total Current	Indicates the average of Heat 1 to 3 current values. Shows the result of the last conduction.
Current Value	Indicates the Heat 1 to 3 current values. Shows the result of the last conduction.
Peak Current	Indicates the peak current during conduction.
Line Voltage	Indicates the line voltage during idling.

Note: The gun No., step order, and spot count vary with the parameter settings.
The display to the left gives an example of data on 8 guns with the Step Up function enabled.

4.4 Description of the welding conditions

Name	Indication	Input condition/Operation/Relevant data	
Gun Selection	GunSel	Input	Selects the gun No. (MV/SOL) used for this series.
		Operation	Provides SOL output to the gun with No. specified by this condition.
		Relevant	Parameter “Pj Gun Sel.”
Pre-squeeze	PrSquez	Input	Setting range: 1 to 99 cyc. 0 cyc indicates “not in use”.
		Operation	The first function in the welding sequence to actuate the MV valve and then stand by. This is skipped during repeat operation.
		Relevant	
Squeeze Time	Squeeze	Input	Setting range: 1 to 99 cyc. Must be used. (0 cyc means no setting.)
		Operation	Function to stand by before going to slope control (conduction).
		Relevant	
Slope Time	Slope	Input	Setting Range: 1 to 99 cyc, Needs to set a value other than 0.
		Operation	A function to gradually increase welding current from the minimum-striking angle of arc to a required level. Slope time before the next welding time is specified here.
		Relevant	
Weld1 Time Weld2 Time Weld3 Time	Weld1 Weld2 Weld3	Input	Setting range: 1 to 99 cyc. 0 cyc indicates “not in use”. 0 cyc cannot be selected for all. At least one location should be set.
		Operation	Conduction time setting.
		Relevant	
Welding Current 1 Welding Current 2 Welding Current 3	Heat1 Heat2 Heat3	Input	Setting range: 2.0 kA to 60.0 kA
		Operation	Heat current value for each conduction time setting.
		Relevant	Welding condition “TurnR”
Cool 1 time Cool 2 time	Cool1 Cool2	Input	Setting range: 1 to 99 cyc. 0 cyc indicates “not in use”.
		Operation	Sets the pause time between conductions.
		Relevant	
Down-slope Time	D.Slope	Input	Setting Range: 1 to 99 cyc, Setting 0 will disable this item.
		Operation	A function to interpolate welding current between Weld-2 Time and Weld-3 Time. The current may increase according to the setting.
		Relevant	

Name	Indication	Input/Operation/Relevant data	
Hold Time	Hold	Input	Setting range: 1 to 99 cyc. Must be used (no 0 cyc setting)
		Operation	Hold time that elapses until the gun is opened after conduction of welding current.
		Relevant	
Transformer turn ratio	TurnR.	Input	Setting range: 0.1 to 200.0 The settable environment differs for each of 1 series, gun series and all series depending on "Pb TransType" condition.
		Operation	Used as a factor to convert the primary current to the secondary current value. Since the alarm "ill.Data" is initiated, 0.0 should not be set.
		Relevant	Parameter "Pb TransType"
Off Time	Off	Input	Setting range: 0, 4 to 99 cyc. 0 cyc indicates "not in use". With the parameter "Pc Repeat Select" ON, this setting can be made.
		Operation	Repeats cycle operation with START SW placed in ON position.
		Relevant	Parameter "Pc Repeat Select"
No. of Pulsation	Pulse	Input	Setting range: 1 to 9 This condition can be set with the parameter "P1 Pulse Sel" ON.
		Operation	Provides pulsation according to the preset count. In addition to the basic cycle operation, whether the operation should be held according to the activation switch information depends on the parameter.
		Relevant	Parameter "P1 Pulse. Sel."
Maximum Current Flowrate	C.Flow+	Input	Setting range: 30 to 100% (100% for disabled)
		Operation	Error judgment criterion used for comparative check on the present conduction state. Flow ratio: The waveform that is observed when the current value controlled by SCR is maximal is called a FULL wave. The ratio of current flow is taken as 100% at the full wave and the specific ratio of flow is determined with respect to this reference. The current decreases as the resistance increases due typically to deteriorated cable. In that case, the control system automatically extends the ON duration. Then the ratio of flow will increase.
		Relevant	Welding condition "CF.Count"; Alarm Signal "Flow%Over"
Error Count	CF.Count	Input	Setting range: 1 to 99. 0 disables this condition.
		Operation	Used as reference count of error judgment when values exceeding the maximum flow ratio persist.
		Relevant	Welding condition "C.Flow+"; Alarm Signal "Flow%Over"

Name	Indication	Input/Operation/Relevant data	
Maximum Pressure	Max.Pre	Input	Setting range: 0 to 9999N Sets the maximum welding pressure for the gun indicated on the drawing.
		Operation	To be a factor used to calculate the pressure set value considering the air pressure value.
		Relevant	Parameter “Pe VP Mode”
Pressure Coefficient	PAdjust	Input	Setting range: 50 to 150%
		Operation	Used to adjust welding pressure. To be a factor used to calculate the pressure set value considering the maximum welding pressure available.
		Relevant	Parameter “Pe VP Mode”
Pressure Rise Time1 Pressure Rise Time1 Pressure Rise Time1	PresT1 PresT2 PresT3	Input	Setting range: 0 to 99 cyc
		Operation	Set time for variable pressure and pressure selector changeover time. These conditions set the time when the welding pressure is to be changed within the weld time from the beginning of the SQ time.
		Relevant	Parameter “Pe VP Mode”
Set Pressure 1 Set Pressure 2 Set Pressure 3	PresV1 PresV2 PresV3	Input	Setting range: 0 to 9999 N or 0 to 100%
		Operation	Set the variable welding pressure of variable pressure. Settable in N and %.
		Relevant	Parameter “Pe VP Mode”
Step 2 to Step 16	Step 2 To Step 16	Input	Setting range: 50 to 200% Settings are made for each of 1 series, gun series and all series according to the parameter conditions.
		Operation	The current values of HEAT1 to 3 increase and decrease according to the present step value. The step range changes to 0 to 15 in the Linear Up mode. See Section “11.8 Linear Up Control” for further details.
		Relevant	Parameters: “P8 Step Type”; “Pk Max Step”; “Pv Linear Up”
Step Count 1 To Step Count 16	Count 1 to Count 16	Input	Setting range: 0 to 9999 Settings are made for each of 1 series, gun series and all series according to the parameter conditions.
		Operation	With step control enabled, the maximum count for each step is indicated. The next step is entered when the count expires.
		Relevant	Parameters: “P8 Step Type”; “Pk Max Step”; “Pv Linear Up”
Current Low Limit	Curr.Low	Input	Setting range: 50 to 100%. 100% for no check.
		Operation	Compares the measured current value with the preset one added with the step up amount for error detection.
		Relevant	Welding conditions “HEAT1, 2 and 3”; Alarm Signal “Current High”

Name	Indication	Input/Operation/Relevant data	
Current High Limit	Curr.Hig	Input	Setting range: 100 to 150%. 100% for no check.
		Operation	Compares the measured current value with the preset one added with the step up amount for error detection.
		Relevant	Welding conditions "HEAT1, 2 and 3"; Alarm Signal "Current High"
Power Voltage Low Limit	V.Limit	Input	Setting Range: 50 to 100%, Setting 100% will disable this item.
		Operation	A function to detect voltage error by comparing the measured voltage with the set voltage (Power voltage low limit). Voltage is measured at the final cycle of weld.
		Relevant	Alarm Output "Line voltage low"
Hold End Delay Time	Hold Dely	Input	Setting range: 0 to 99 cyc
		Operation	The Hold End signal is not delivered upon elapse of HO (hold time), but is sent with a time lag that is set here.
		Relevant	
Peak Current Limit	PeakCurr	Input	Setting range: 100 to 200% 100% for no check.
		Operation	Criterion of error judgment when the measured current value is compared with the preset one added with the step up amount. If any peak value of W1, W2 and W3 exceeds the set range, "PeakCurHigh" is delivered.
		Relevant	Alarm Signal "PeakCurHigh"
Step Return Position	StepRet.	Input	Setting range: 1 to 15, up to the parameter "Pk Max Step" - 1.
		Operation	Allows a return to the step that has the designated order upon receipt of the Step Select Reset signal.
		Relevant	Parameters: "P8 Step Type"; "Pk Max Step "

4.5 Description of functions related to parameters

Name (indication)	Condition for Enabled / Operation
Pulsation Select (P1: Pulse Sel)	ON: Enabled OFF: Disabled Operation: Repeats the COOL1 and WELD2 cycles the number of times preset by Pulsation Count.
A or B Mode select (P2: AB MODE)	ON: A MODE OFF: B MODE Operation: The welding conditions of Series 1 to 4 are selected by selecting one input signal individually from 4 switch inputs. The lower value is given preference if signals from 2 or more switches have been selected at the same time. In B MODE, the welding conditions of Series 1 to 15 are selected by combining 4 switch inputs.
Alarm Signal NO/NC Select (P3: ALM Out)	ON: Normally open OFF: Normally closed Operation: Selects whether the alarm output is used in NORMAL OPEN state or NORMAL CLOSE state upon detection of an alarm.
Trigger Start (P4: One Shoot)	ON: Enabled OFF: Disabled Operation: ON setting of this parameter accepts a SW input even when it is a pulse input.
Hold End Signal Select (P5: Hold Out)	ON: Enabled OFF: Disabled Operation: ON setting of this parameter outputs the Hold End signal following (or upon) output of alarm signal even when a warning alarm such as Current Error has occurred..
Hold End Signal Delay Select upon generation of alarm (P6:HoldA Dly)	ON: Enabled (used in conjunction with Hold End Signal Select ON) OFF: Disabled Operation: Process to delay output of the Hold End signal by 30cyc after output of an alarm signal when a warning alarm such as Current Error has occurred. (HOLD DELAY process)
Alarm Signal Output Select (P7: ALM Mode)	0: Alarm pulse output 1: Alarm continuous output. Conduction can be continued. 2: Alarm continuous output. Waiting for reset. 3: No alarm. Alarm indication only. Operation: Controls alarm output according to the setting when a warning alarm such as Current Error has occurred. When this parameter is set to 0 and Hold End signal DELAY selection is ON, the alarm signal output time is fixed to 30 cyc. When OFF, the alarm output depends on the Start switch state.

Name (indication)	Condition for Enabled / Operation
STEP Series Select (P8: Step Type)	0: Step Up function Disabled 1: Step Up series for gun series 2: Step Up series for all series Operation: When this parameter is set to 0, the Step Up function Disabled is selected. When set to 1, the gun with No. (any of 1 to 8) selected in setup data enters the Step Up series. When set to 2, the Step Up series is fixed to 4 (Mode A)/15 (Mode B) series.
Trigger SW priority select (P9: SW Mode)	ON: START SW Preferred OFF: Sequence Preferred Operation: When Start switch is turned off during weld or cool time, this parameter causes the welding sequence to end at the current conduction cycle, skipping to Hold while suspending the remaining weld or cool time period. If OFF, the parameter causes the welding sequence to reach its end regardless of the activation switch state.
Japanese / English Select (Pa: Japanese Select)	ON: Japanese OFF: English Operation: Switches the display language between Japanese and English.
Transformer Turn Ratio Series Select (Pb: Transformer Type)	0: Turn Ratio for 1 series 1: Turn Ratio for gun series 2: Turn Ratio for all series Operation: When this parameter is set to 0, the Transformer Turn Ratio setting is for 1 series. When set to 1, the Transformer Turn Ratio setting series is for the gun No. (any of 1 to 8) selected in welding condition setup data. When set to 2, it is for 4 (Mode A)/15 (Mode B) series.
Repeat Select (Pc: Repeat Select)	ON : Enabled OFF: Disabled Operation: Repeats the sequence following Squeeze with START SW placed in the ON position. Turning the START SW OFF cancels the repeat operation. The output time of the Hold Completion signal depends on the OFF time.
Re-Weld Enabled Select (Pd: Reweld)	ON: Enabled OFF: Disabled Operation: Performs reweld upon detection of Current Low Error. After reweld, recurrence of Current Low Error causes the Current Low Error alarm to be outputted without re-executing this reweld. When “SW Mode” is ON, whether reweld is to be made or not depends on the START SW state.

Name (indication)	Condition for Enabled / Operation
Variable Pressure Application Select (Pe: VP Mode)	0: Parameter not used. 1: Variable Pressure % setting method selected 2: Variable Pressure direct setting method selected Operation: This selects whether the gun welding pressure is set in % or N (Newton). When N is used, it is required that the maximum gun welding pressure and the air pressure be accurately set.
Variable Pressure Control Output Select (Pf: VP Type)	0: Control voltage range: 0 to 5V 1: Control voltage range: 0 to 10V Operation: "0" selection: When the SMC variable pressure valve is used: "1" selection: When the CKD variable pressure valve is used. For the electro-pneumatic regulator, select the appropriate voltage as specified.
Caution Output Select (Pg: Warning Select)	ON: Enabled OFF: Disabled Operation: This function determines whether the warning output is to be an alarm contact output or prohibited. When ON, the function provides an alarm contact output upon detection of an alarm.
Thermo SW Check Method Select (Ph: Gun C Select)	ON: Enabled (Check in squeeze operation) OFF: Disabled (Constant check) Operation: For Gun Change Type, if the transformer thermo is constantly monitored, the transformer thermo line is open temporarily during gun change and an alarm occurs in spite of no fault. With this function ON, any Transformer Thermo Check will not be made in idling mode.
Alarm Signal Select during No Weld and Conti. Press. modes (Pi: Test W·ALM)	ON: Alarm contact output Enabled OFF: Alarm contact output Disabled Operation: Provides alarm contact output during conduction off sequence and during continue-to-pressurize operation. Then, the Hold End signal follows the output. With this function OFF, none of alarm contact output and alarm message output is effected.

Name (indication)	Condition for Enabled / Operation
Gun Selection (Pj: Gun Sel)	01 to 08: Set value is used to select the maximum SOL No. 11 to 18: 'Retract' function Enabled 21 to 28: 'Retract Reverse Connection' function Enabled 31 to 38: 'Valve Changeover during Conduction' function Enabled 41 to 48: 'Weld Interlock' function Enabled 51 to 58: 'Retract' function Enabled + 'Cross Interlock' function Enabled 61 to 68: 'Retract Reverse Connection' function Enabled + 'Cross Interlock' function Enabled Operation: The upper digit (from 0* to 4*) represents the valve function selection. The lower digit (from *1 to *8) represents the maximum number of guns to be used. When the upper digit is non-zero, SOL3 and 4 are used for other functions and therefore cannot be used for SOL. When DeviceNet is used (with Parameter "Pq Remote I/O" ON), only the maximum gun No. from 01 to 08 is set. 'Retract' function: Outputs Retract SOL7 (B2) in response to input from Retract START SW 7 (B8: terminal block TB1) and outputs Retract SOL8 (B3) in response to input from Retract START SW 8 (B9). 'Valve Changeover during Conduction' function ('Pressure selector' function) : Outputs MV3 (B2: terminal block TB1) upon expiration of the set time for the welding condition Pressure Increase Time 1. Then outputs MV4 (B3) upon expiration of Pressure Increase Time 2. See Section "11.10, Pressure Sector" for further details. 'Weld Interlock' function: Outputs Activation Acknowledgement (B2: terminal block TB1) in response to signal from START SW 1 to 4. Also outputs Conducting information from the Conducting output (B3). Extends the Squeeze Time in response to the Wait for Conduction input (B8). See Section "11.11 Weld Interlock" for further details. 'Retract' + 'Cross Interlock' function: In response to Retract START SW 7 (B8) input, outputs Retract SOL7 (B2) when Retract SOL8 (B3) Is OFF. In response to Retract START SW 8 (B9) input, outputs Retract SOL8 (B3) when SOL7 (B2) is OFF. ↓ See the chart on the next page.

<table>
<tr><th>Name (indication)</th><th>Condition for Enabled / Operation</th></tr>
<tr><td>Gun Selection
(Pj: Gun Sel)</td><td>TB1 output relationship chart based on the Gun Selection settings.
When the DeviceNet is not used:
<table>
<tr><th></th><th>SOL1</th><th>SOL2</th><th>SOL7
(SOL3)</th><th>SOL8
(SOL4)</th></tr>
<tr><td>01</td><td>Valve output</td><td></td><td></td><td></td></tr>
<tr><td>02</td><td>Valve output</td><td>Valve output</td><td></td><td></td></tr>
<tr><td>03</td><td>Valve output</td><td>Valve output</td><td>Valve output</td><td></td></tr>
<tr><td>04 ~ 08</td><td>Valve output</td><td>Valve output</td><td>Valve output</td><td>Valve output</td></tr>
<tr><td>11</td><td>Valve output</td><td></td><td rowspan="2">SW7
Retract output</td><td rowspan="2">SW8
Retract output</td></tr>
<tr><td>12 ~ 18</td><td>Valve output</td><td>Valve output</td></tr>
<tr><td>21</td><td>Valve output</td><td></td><td rowspan="2">SW8
Retract output</td><td rowspan="2">SW7
Retract output</td></tr>
<tr><td>22 ~ 28</td><td>Valve output</td><td>Valve output</td></tr>
<tr><td>31</td><td>Valve output</td><td></td><td rowspan="2">T2 Time
Valve output</td><td rowspan="2">T3 Time
Valve output</td></tr>
<tr><td>32 ~ 38</td><td>Valve output</td><td>Valve output</td></tr>
<tr><td>41</td><td>Valve output</td><td></td><td rowspan="2">Output under
Acceptance of
activation</td><td rowspan="2">Output under
conduction</td></tr>
<tr><td>42 ~ 48</td><td>Valve output</td><td>Valve output</td></tr>
<tr><td>51</td><td>Valve output</td><td></td><td rowspan="2">SW7
Retract output</td><td rowspan="2">SW8
Retract output</td></tr>
<tr><td>52 ~ 58</td><td>Valve output</td><td>Valve output</td></tr>
<tr><td>61</td><td>Valve output</td><td></td><td rowspan="2">SW8
Retract output</td><td rowspan="2">SW7
Retract output</td></tr>
<tr><td>62 ~ 68</td><td>Valve output</td><td>Valve output</td></tr>
</table>
Note: The lower digits from *5 to *8 represent a virtual valve and GUN Counter</td></tr>
<tr><td>STEP UP Maximum Count Setting
(Pk: Max Step)</td><td>2 to 16: STEP UP maximum count setting.
Operation: This value is used to set the last step order (maximum step count).
Set this parameter to 0 for step off.</td></tr>
<tr><td>Display Level Select
(Pl: Display Level)</td><td>0: All display. 1: 1 group minimum mode
2: Limited to 1 group 3: Limited to 4 groups
Operation: Only the minimum setting data allows conduction.</td></tr>
<tr><td>Welding Power Reference Voltage Setting
(Pm: Reference Voltage)</td><td>0: 200 V setting 1: 220 V setting 2: 380 V setting 3: 400 V setting
4: 420 V setting 5: 440 V setting 6: 460 V setting 7: 480 V setting
Operation: Step Down Transformer is set in accordance with the welding power and then this function is selected accordingly.</td></tr>
</table>

Name (indication)	Condition for Enabled / Operation
Welding On/Off Select (Pn: Test Mode)	Operation: 0: Welding On (standard) 1: Performs gun operations only without application of the welding current. 2: Continues to pressurize when START SW is ON. 3: The Start series is enabled when Series 15 in Group 15 is selected. 4: The Start series is enabled when Series 15 is selected without regard to groups.
Timer No. Setting (Po: TM NO.)	0 to 99: Timer No. setting Operation: To be set when more than one timer is connected (OPTION). Set the last 2 digits of the manufacture number of the timer (recommendation).
Gun Fixed Select (Pp: Gun NO. Fix)	ON: Enabled (The gun is fixed in activation series.) OFF: Disabled (The gun is freely selected in each activation series.) Operation: Enabled: Assigns an odd number of Start series (1,3,5... to SOL1 and an even number (2,4,6...) to SOL2. Mainly used for a portable system. However, when the lower digit is 1 in "Pj Gun Select" (the maximum number of guns is 1), all series are fixed to SOL1. Disabled: The output SOL can be freely selected for each of the Start series.
Remote I/O Select (Pq: Remote I/O)	ON: Remote I/O control Enabled (DeviceNet is supported.) OFF: Remote I/O control Disabled Operation: When this parameter is set to ON, DeviceNet is supported. Then the terminal block TB1 is switched from timer input/output to general-purpose input/output scheme.
Current Detect Signal Output (Pr: CurDetect)	ON: Enabled OFF: Disabled Operation: Enabled: Outputs the Current Detect signal from B6 on the terminal block TB1 when normal conduction is detected with WELD ON. The output is timed approximately 1 cyc after HOLD time process has started. When the parameter "Pr CurDetect" is enabled, the Last Step signal will not be delivered. This is only indicated on the TP. Disabled: The Current Detect signal will not be delivered. When the parameter "P8 Step Type" is set to non-zero, this parameter outputs the Last Step signal from B6 on the terminal block TB1. Note: With Remote I/O enabled, the TB1 is used as a remote I/O terminal block. Therefore, the Current Detect signal will not be delivered from the terminal block TB1.

Name (indication)	Condition for Enabled / Operation
Step 2 Series Select (Ps: Step 2 Series)	ON: Enabled ("Ps" and "P8 " Step Type" are ON (1or 2)) OFF: Disabled Operation: Enabled: Outputs the Step Completion signal for step series 1 from B5 on the terminal block TB1 when the step series 1 is completed. Outputs the Step Completion signal for step series 2 from B6 on the terminal block TB1 when the step series 1 is completed. Any signals other than step series 1 and 2 will not be outputted. (The step series 1 and 2 only are independent for output.) Disabled: If the parameter "P8 Step Type" setting is non-zero, this parameter outputs the Step Completion signal from B5 on the terminal block TB1 when either step series is completed.
Step Linear Up Control (Pv: Linear Up)	ON: Enabled OFF: Disabled Operation: Enabled: Performs linear interpolation with the aid of the subsequently applied current for step control. The current value the rate of which is obtained through division by the set spot count is used to gradually step up the current. Disabled: Step order control is selected.

Note on Changing Parameters

⚠ CAUTION

- When you have changed parameter settings, turn the power of the timer main unit off and then on again in order to ensure the system operation. The system can malfunction if it is continually used without taking this step.
- When you have changed parameter settings, the data on associated welding conditions need be verified again or modified as appropriate.

Example1) When Pulsation Select has been changed from 0: Disabled to 1: Enabled:
The Pulsation Count item is added to the welding conditions.

Example2) When Step Series Select has been changed from 0: Disabled to 1: Gun Series.
The Step Up Rate and Step Count items are added to the welding conditions.

Example 3) When the parameter Pressure Gun Select has been changed:
All the settings including Pressure Gun Select, Turn ratio, and Step Series Data in the welding conditions need be verified again.

4.6 Initial operation of the TP

<TP-NET is one-to-one connected with the timer (usual case). >

Go to the next page.

<One-to-N connection between TP-NET and timers>

(One TP-NET is used to set conditions for multiple timers that are connected with the TP-NET via cables.)

When the power to the timers is turned on with TP-NET connected, the initial screen will be displayed in the sequence below. After the TM No. list is displayed, select TM No. of the timer to be edited.

< TP-NET screen display >

Screen appearing upon power-on

```
WELD.ContactROLLER
TEACHING PENDANT
IV**.*    TP**.*
OP**.*  WAIT...
```

TM No. list — After several seconds

```
15  16  17


TM#              Next ↓↑
```

Version display — Select the intended TM No.

```
WELD.ContactROLLER
TEACHING PENDANT
IV 8.0    TP 7.0
OP 7.0  WAIT...
```

Initial screen — After several seconds

```
GUN1            17401
GUN2                0
GUN3                0
Mon  TMD  TPD  Mode
```

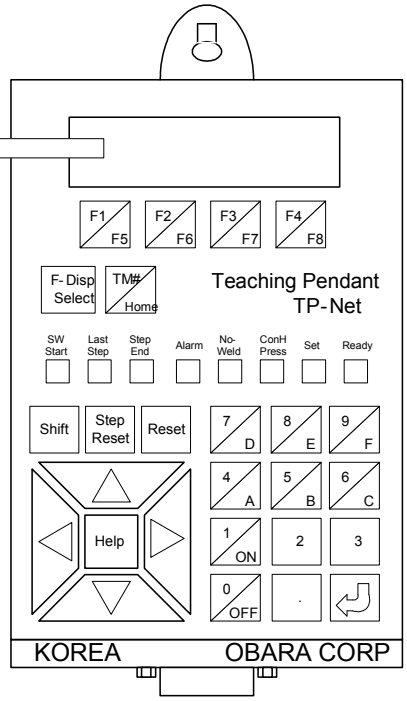

< Other related operation >

Shift + #TM Home

Shift + TM#key
can call up the TM No. list screen

```
15  16  17


TM#              Next ↓↑
```

Description of the initial screen

When the intended timer is selected, the following initial screen appears.
The 4th row on the display screen is for the function keys. Input through the function keys selects the various functions.

<TP-NET screen display>

Initial screen

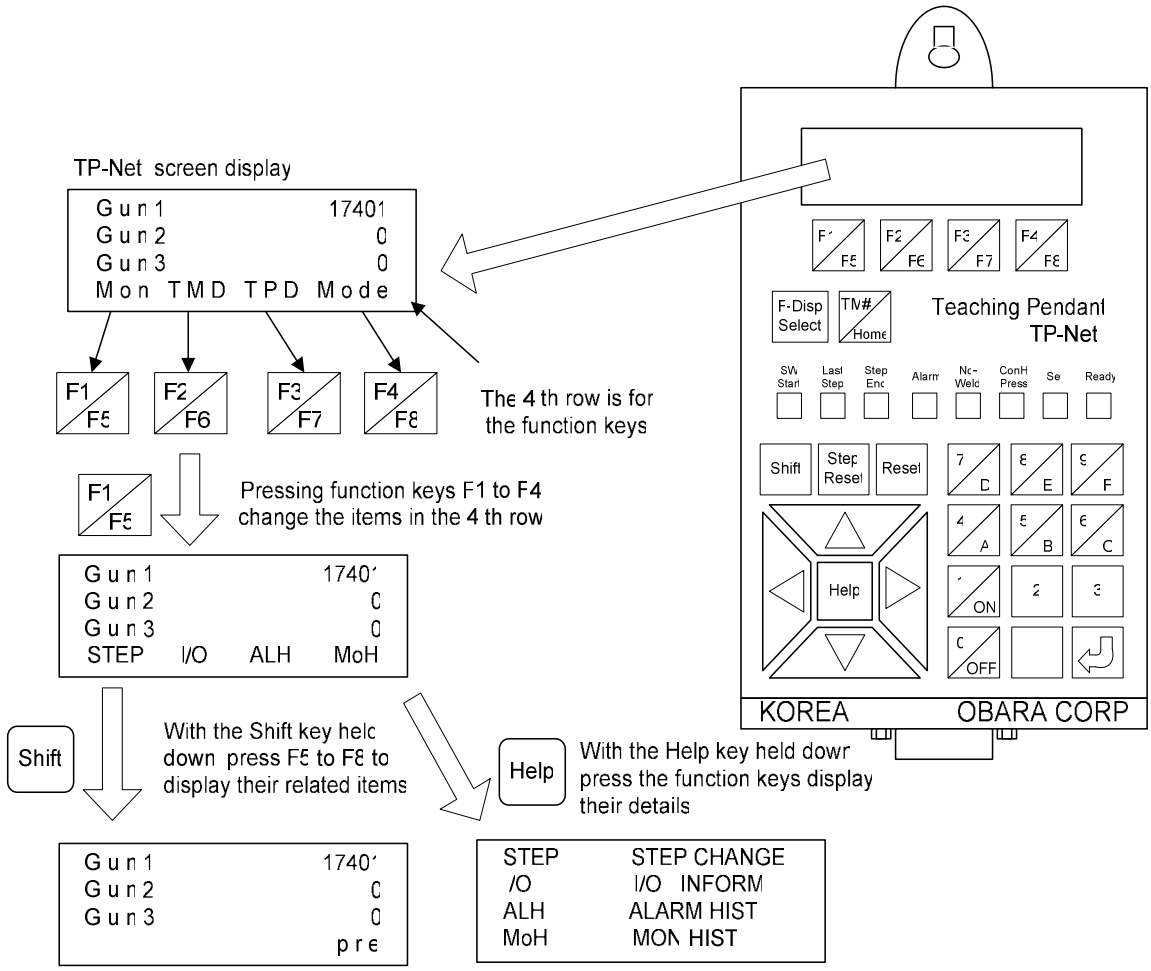

<Other Key Operations>

Reset — Use the Reset key to correct your data input.	Shift + F4/F8 — Invokes the Previous state.
	#TM Home — Press the Home key to return to the initial screen

4.7 Setting and changing parameters

When setting and changing parameters, make sure that the Setup mode is already selected. Remember that, when parameter has been changed, the displayed items of the welding conditions may also be changed.

Example: Enable the timer's internal parameter "Pulsation":

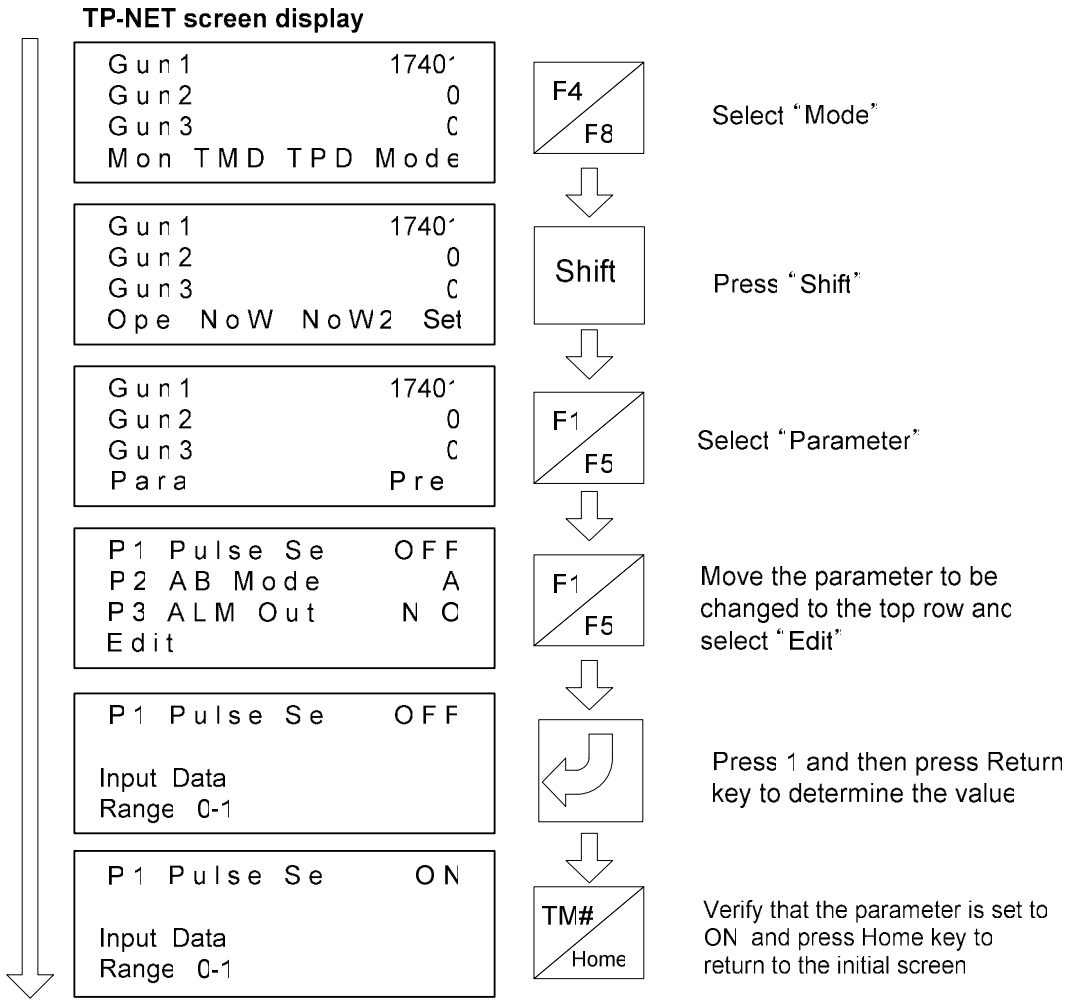

See Section "4.5 Description of the parameters" for the setting method of each parameter.

Example Enable the parameter "One Shoot" of the TP internal unit 2

TP-NET screen display

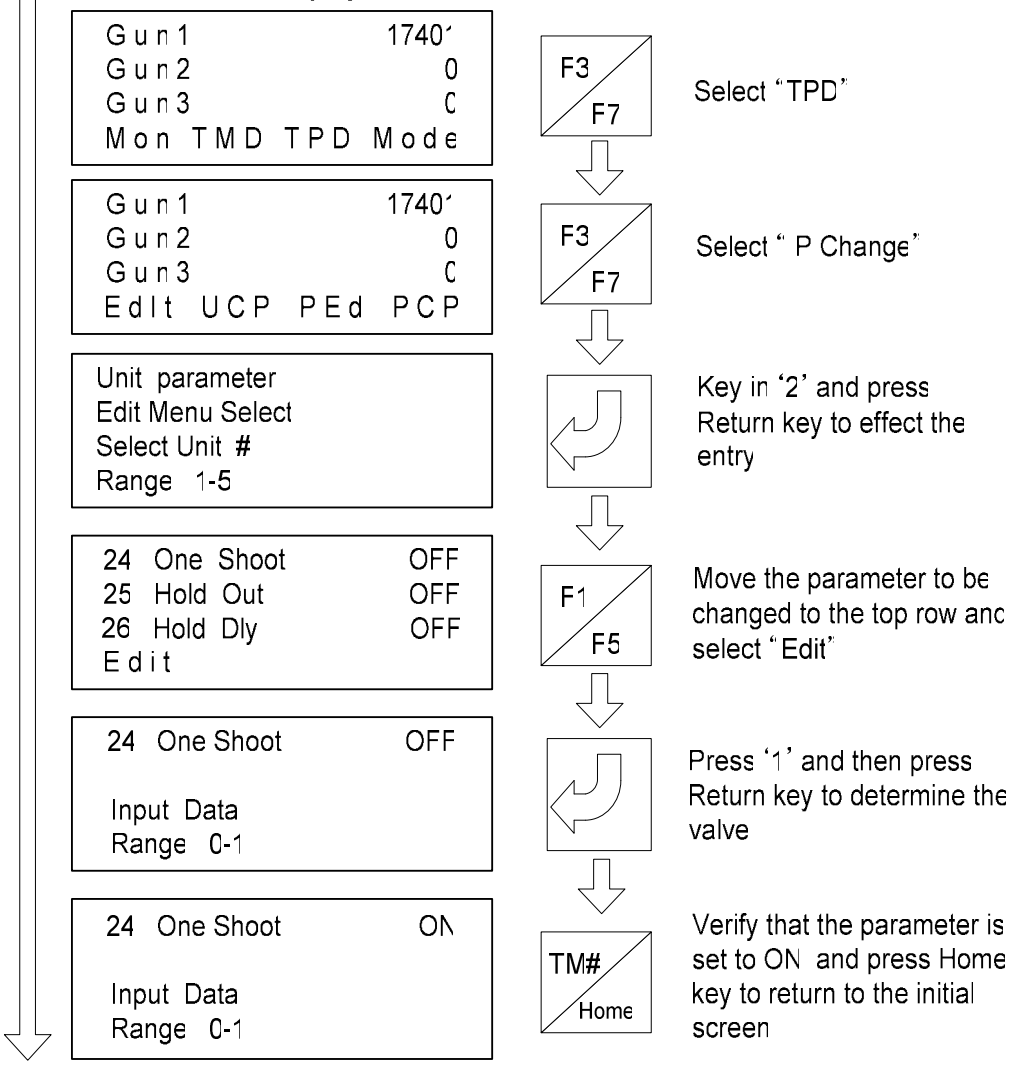

See Section "4.5 Description of the parameters" for the setting method of each parameter.

4.8 Setting and changing welding conditions

When setting and changing parameters, make sure that the Setup mode is already selected.
Parameter data should be set before entering welding conditions.
Otherwise, the displayed items of the welding conditions may be changed.

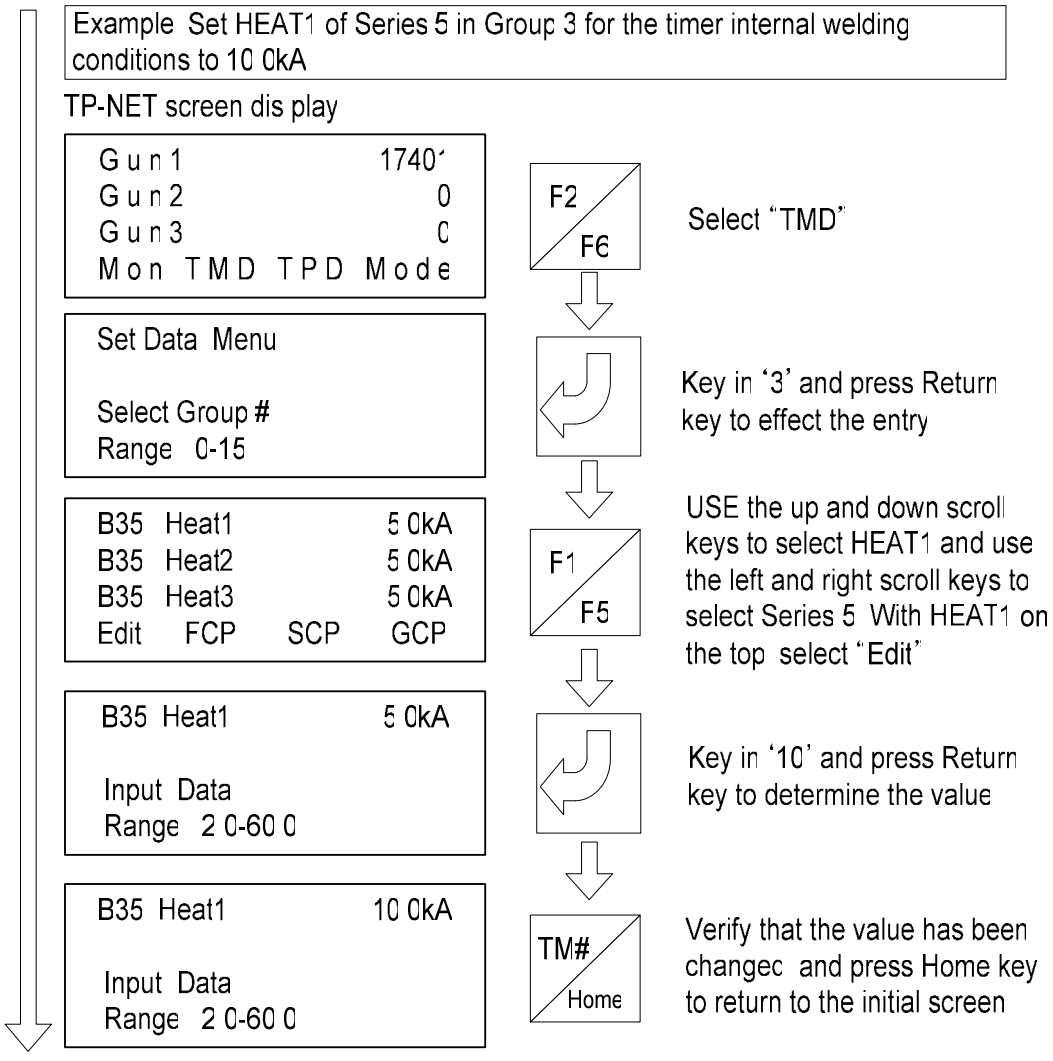

Example: Set Squeeze of Series 14(D) in Group 0 for the TP internal unit 2 to 5cyc:

TP-NET screen display

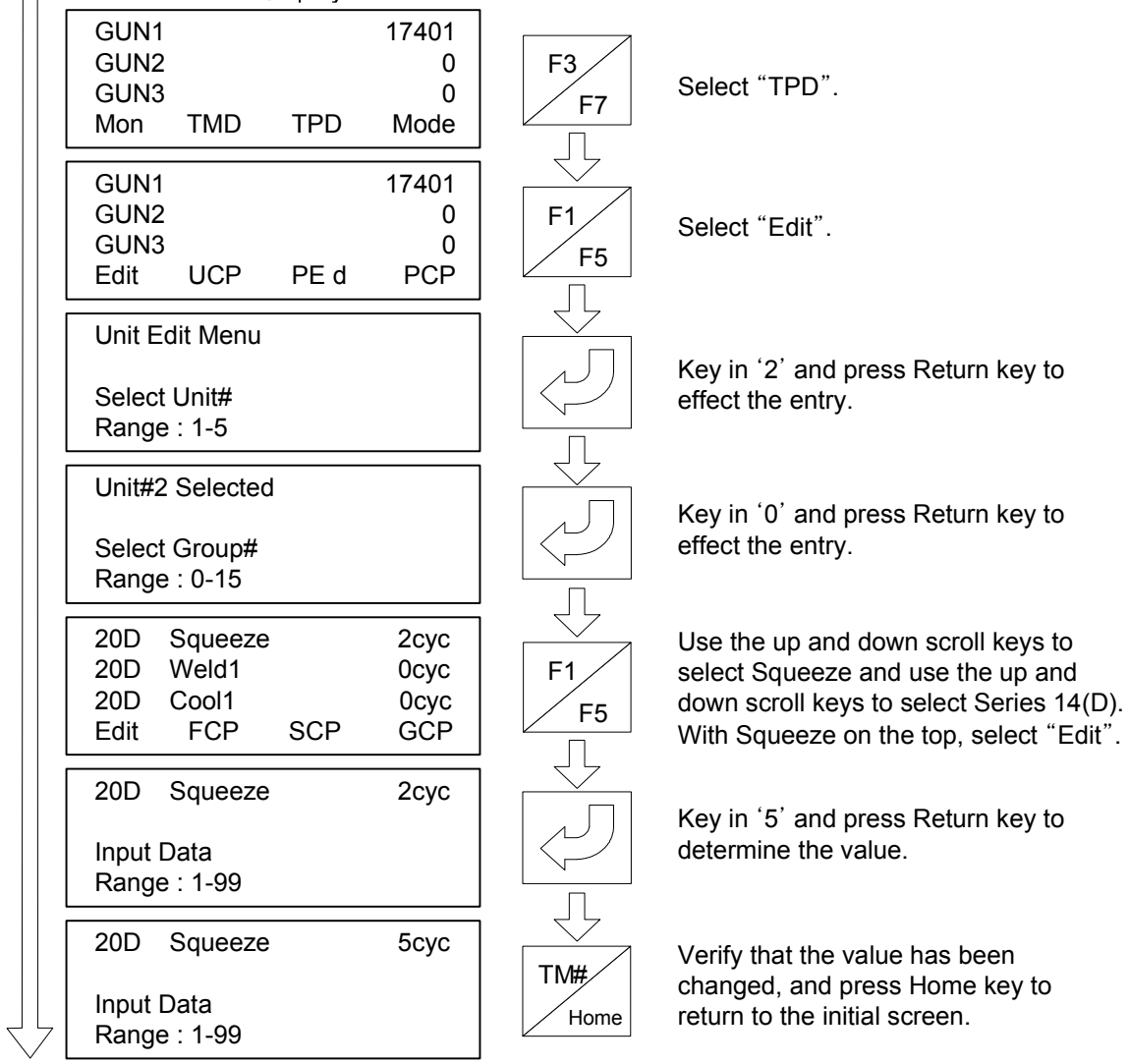

4.9 Copy and Verify functions for welding conditions

When entering and editing data about welding conditions, various copy functions can be used to reduce the keying-in time.

Copy function	Description
Function Copy (FCP)	Copies a welding condition function to all the Start series.
Series Copy (SCP)	Copies data from one Start series to another.
Group Copy (GCP)	Copies data from one group to another.
Group Verify (GVR)	Verify data between groups. Used for conformation and such after making a Group Copy.

Explanatory Drawing of Copy Functions:

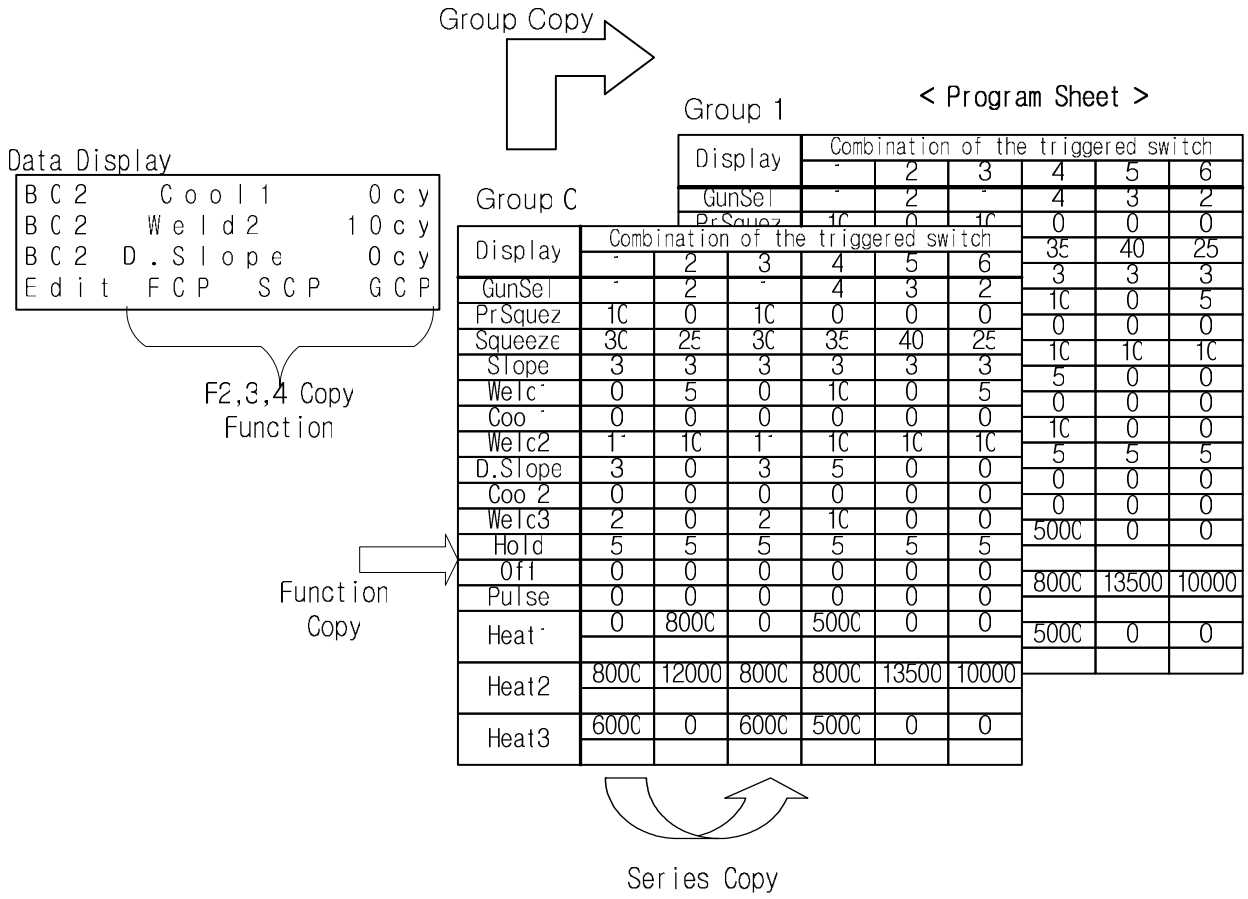

Display	Combination of the triggered switch					
	-	2	3	4	5	6
GunSel	-	2	-	4	3	2
PrSquez	1C	0	1C	0	0	0
Squeeze	3C	25	3C	35	40	25
Slope	3	3	3	3	3	3
Welc	0	5	0	1C	0	5
Coo	0	0	0	0	0	0
Welc2	1	1C	1	1C	1C	1C
D.Slope	3	0	3	5	0	0
Coo 2	0	0	0	0	0	0
Welc3	2	0	2	1C	0	0
Hold	5	5	5	5	5	5
Off	0	0	0	0	0	0
Pulse	0	0	0	0	0	0
Heat	0	800C	0	500C	0	0
Heat2	800C	12000	800C	800C	13500	10000
Heat3	600C	0	600C	500C	0	0

Display	Combination of the triggered switch		
	4	5	6
GunSel	4	3	2
PrSquez	0	0	0
Squeeze	35	40	25
Slope	3	3	3
Welc	1C	0	5
Coo	0	0	0
Welc2	1C	1C	1C
D.Slope	5	0	0
Coo 2	0	0	0
Welc3	1C	0	0
Hold	5	5	5
Off	0	0	0
Pulse	0	0	0
Heat	500C	0	0
Heat2	800C	13500	10000
Heat3	500C	0	0

4.9.1 Using the FCP

Example: Copy Hold 10cyc of Series 1 in Group 0 for T P internal unit 2 to Series 1 to 15 in that group:

TP-NET screen display

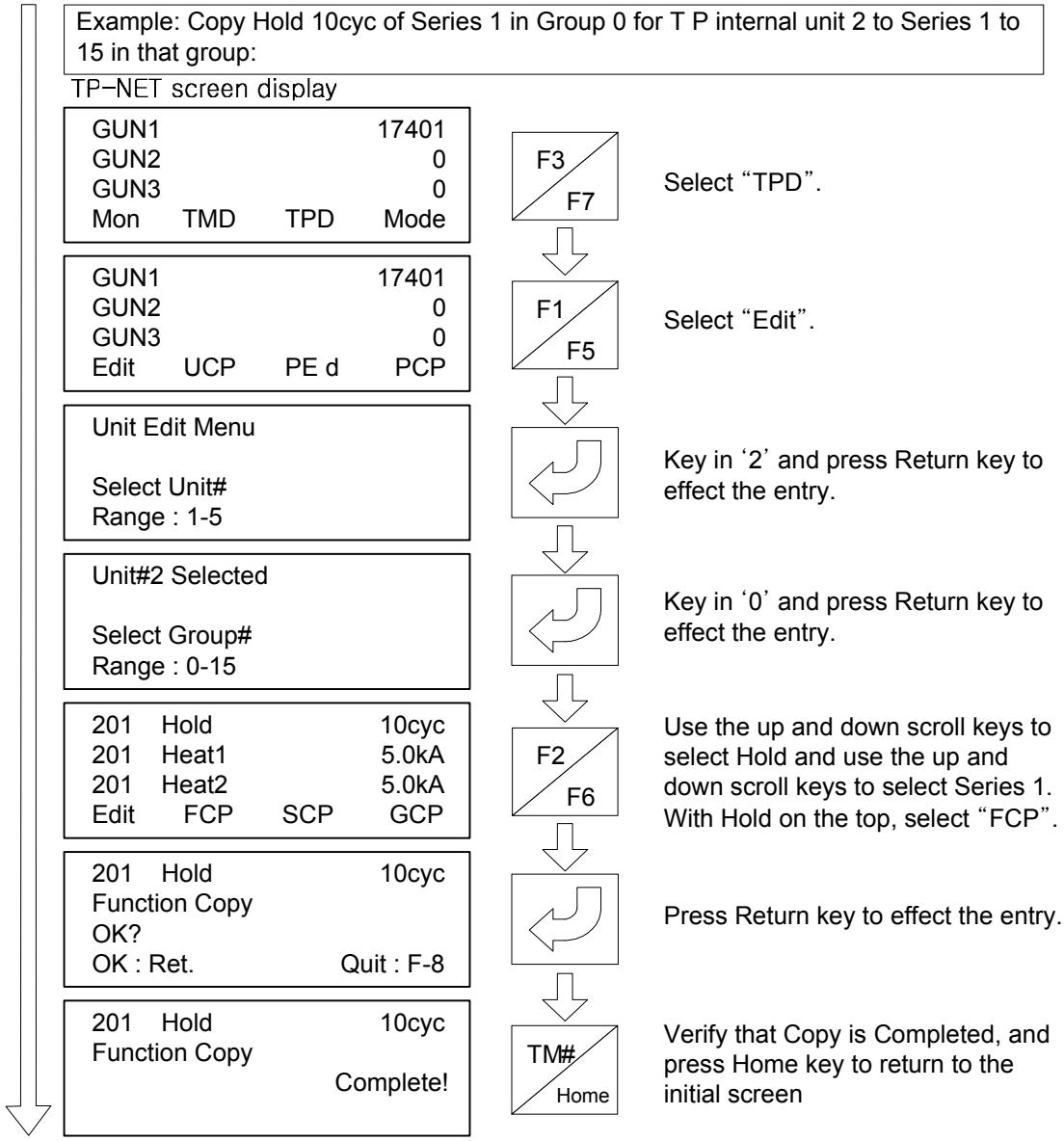

4.9.2 Using the series copy function SCP

Example: Copy Series 6 in Group 1 for the TP internal unit 3 to Series 10:

TP-NET screen display

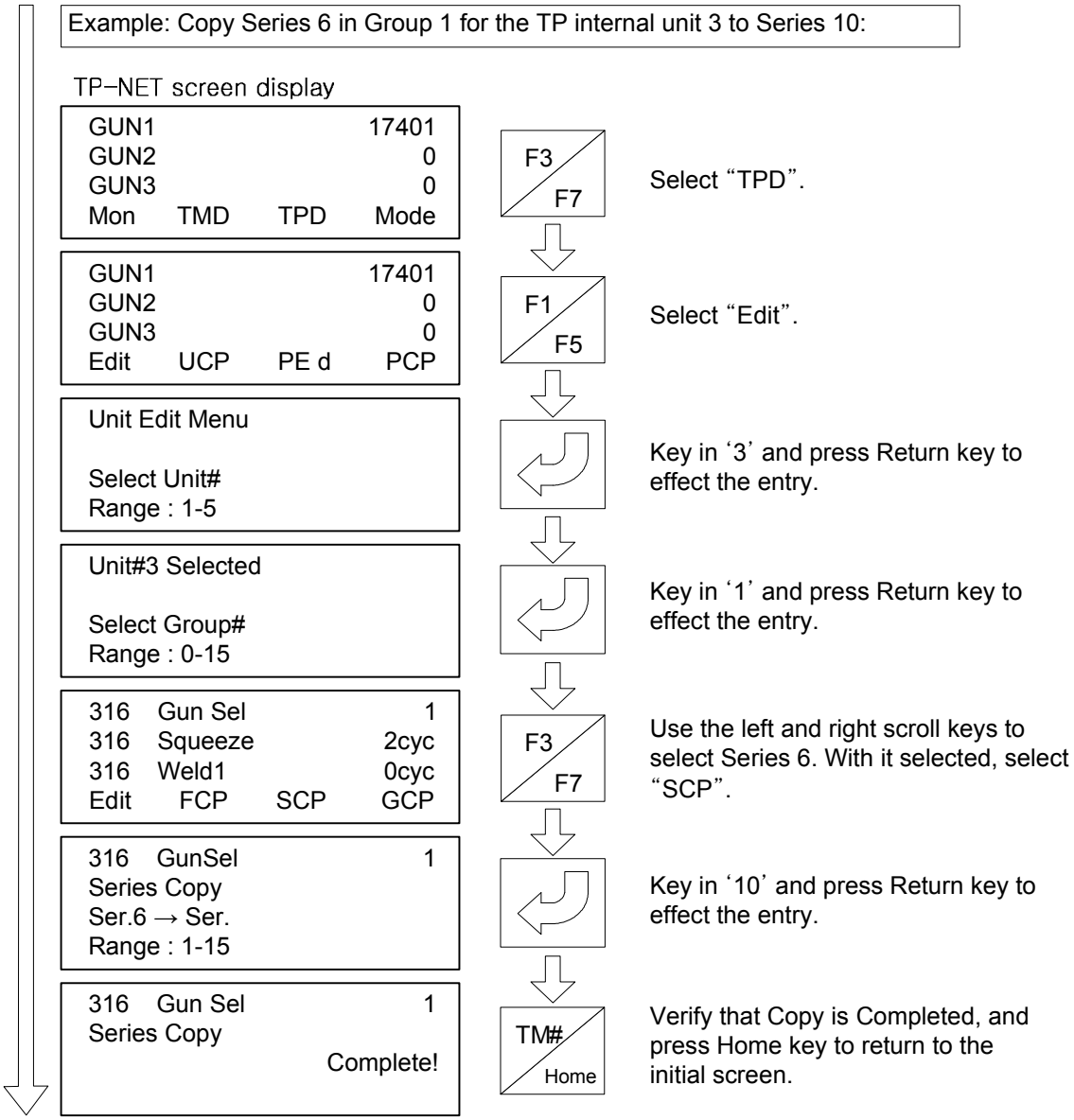

4.9.3 Using the group copy function GCP

Example: Copy Group 10 for the TP internal unit 4 to Group 10 for the unit 1:

TP-NET screen display

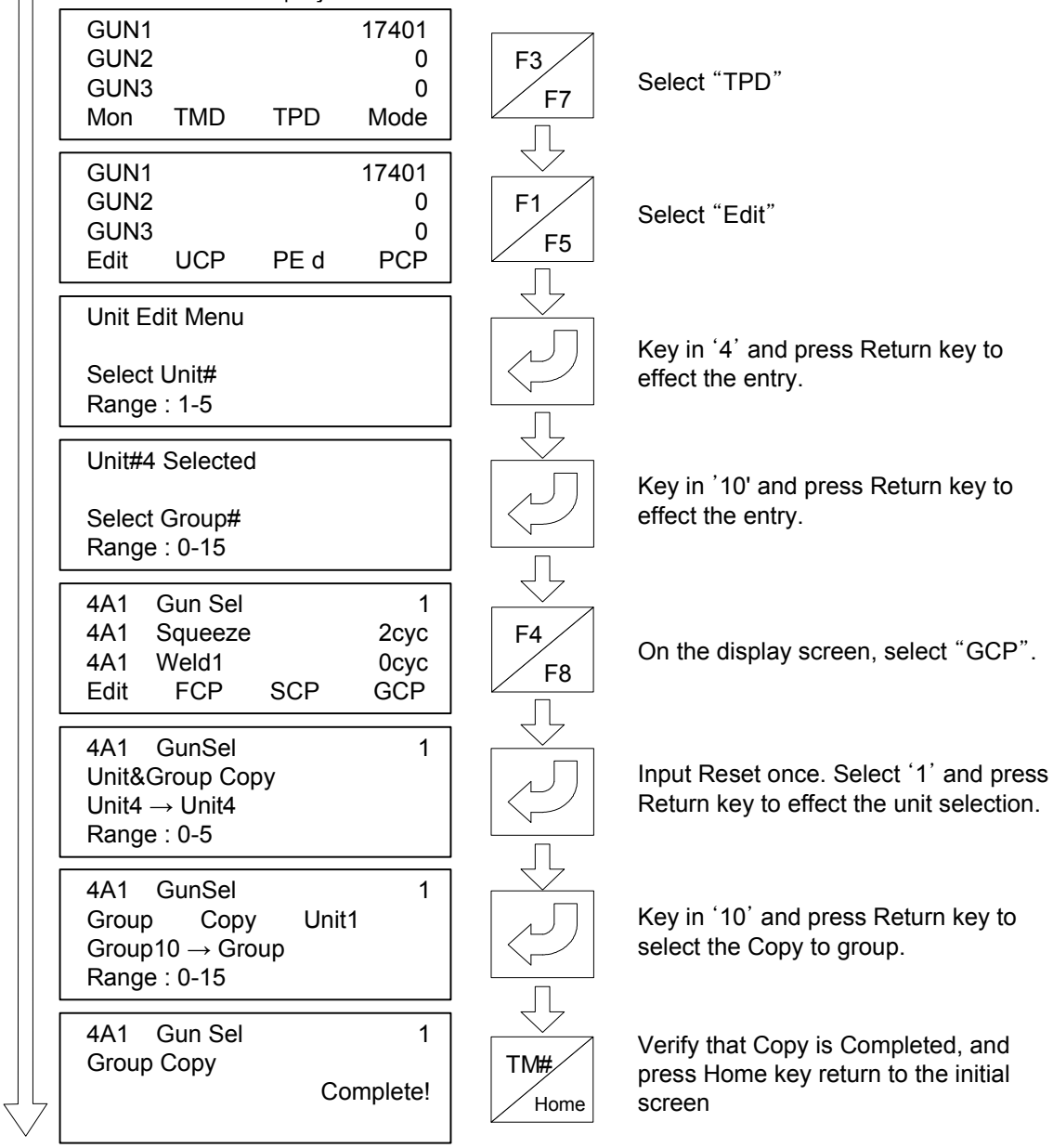

4.10 Copy and Verify data between the timer and the TP

This function is used when you are storing the timer data into the TP or you want to input the data created by the TP into the timer.
It is also used when you want to compare the data and to verify that it has been sent correctly.

4.10.1 T → P

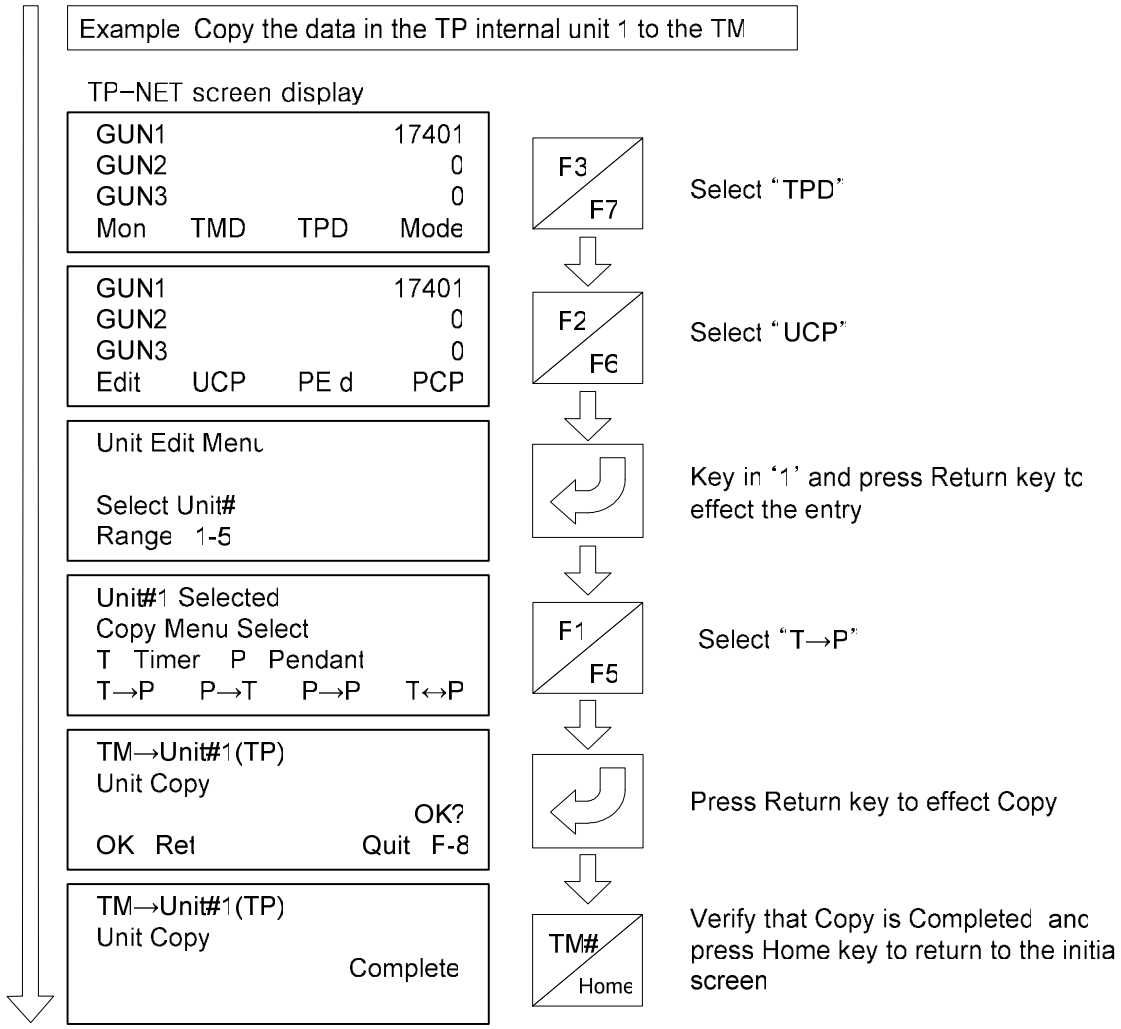

4.10.2 P → T

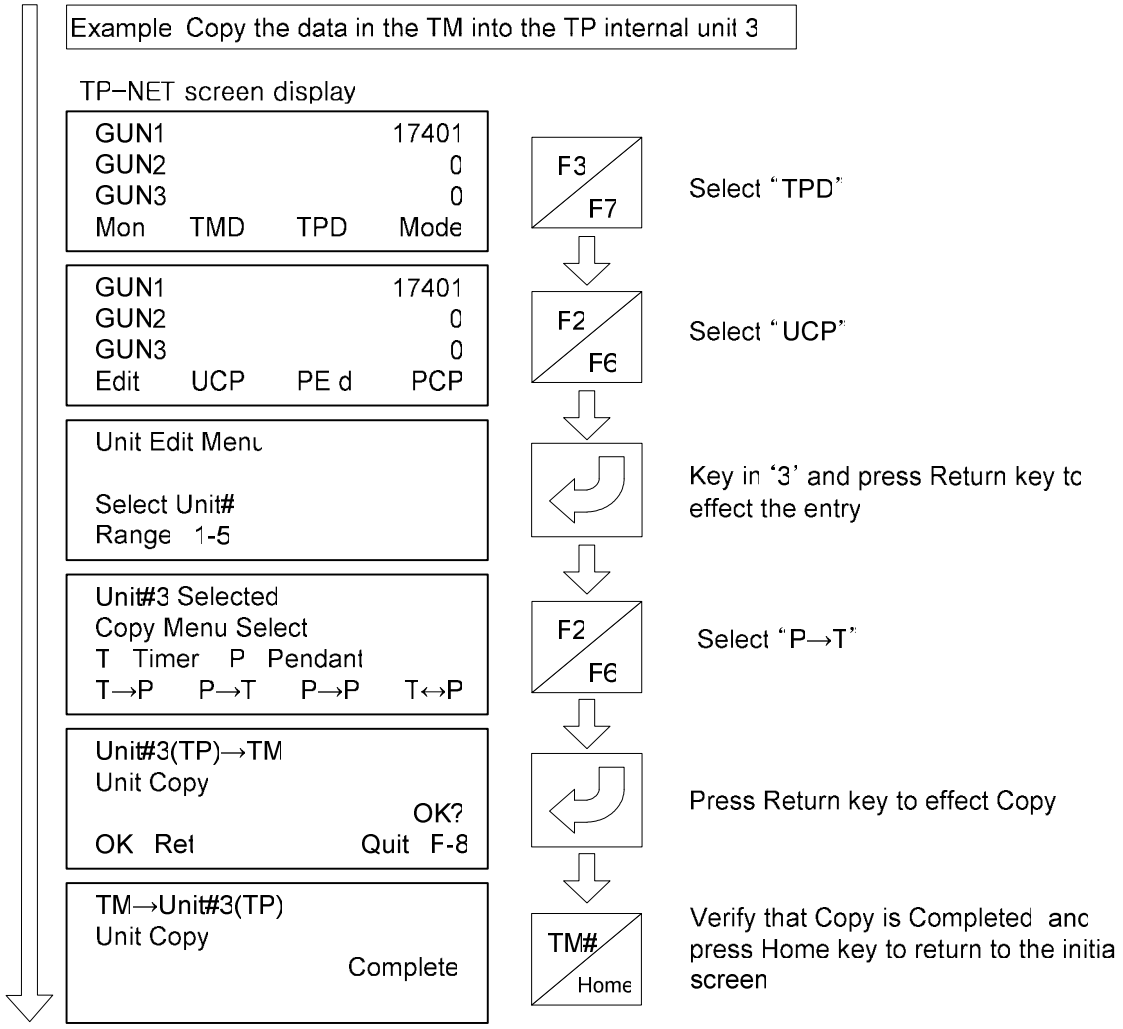
Example Copy the data in the TM into the TP internal unit 3
TP-NET screen display
GUN1 17401
GUN2 0
GUN3 0
Mon TMD TPD Mode
GUN1 17401
GUN2 0
GUN3 0
Edit UCP PE d PCP
Unit Edit Menu
Select Unit#
Range 1-5
Unit#3 Selected
Copy Menu Select
T Timer P Pendant
T→P P→T P→P T↔P
Unit#3(TP)→TM
Unit Copy
OK?
OK Ret Quit F-8
TM→Unit#3(TP)
Unit Copy
Complete
F3
F7
Select "TPD"
F2
F6
Select "UCP"
Key in '3' and press Return key to effect the entry
F2
F6
Select "P→T"
Press Return key to effect Copy
TM#
Home
Verify that Copy is Completed and press Home key to return to the initial screen

4.10.3 P → P

Example Copy the data in the TP internal unit 3 into the TP internal unit 5

TP-NET screen display

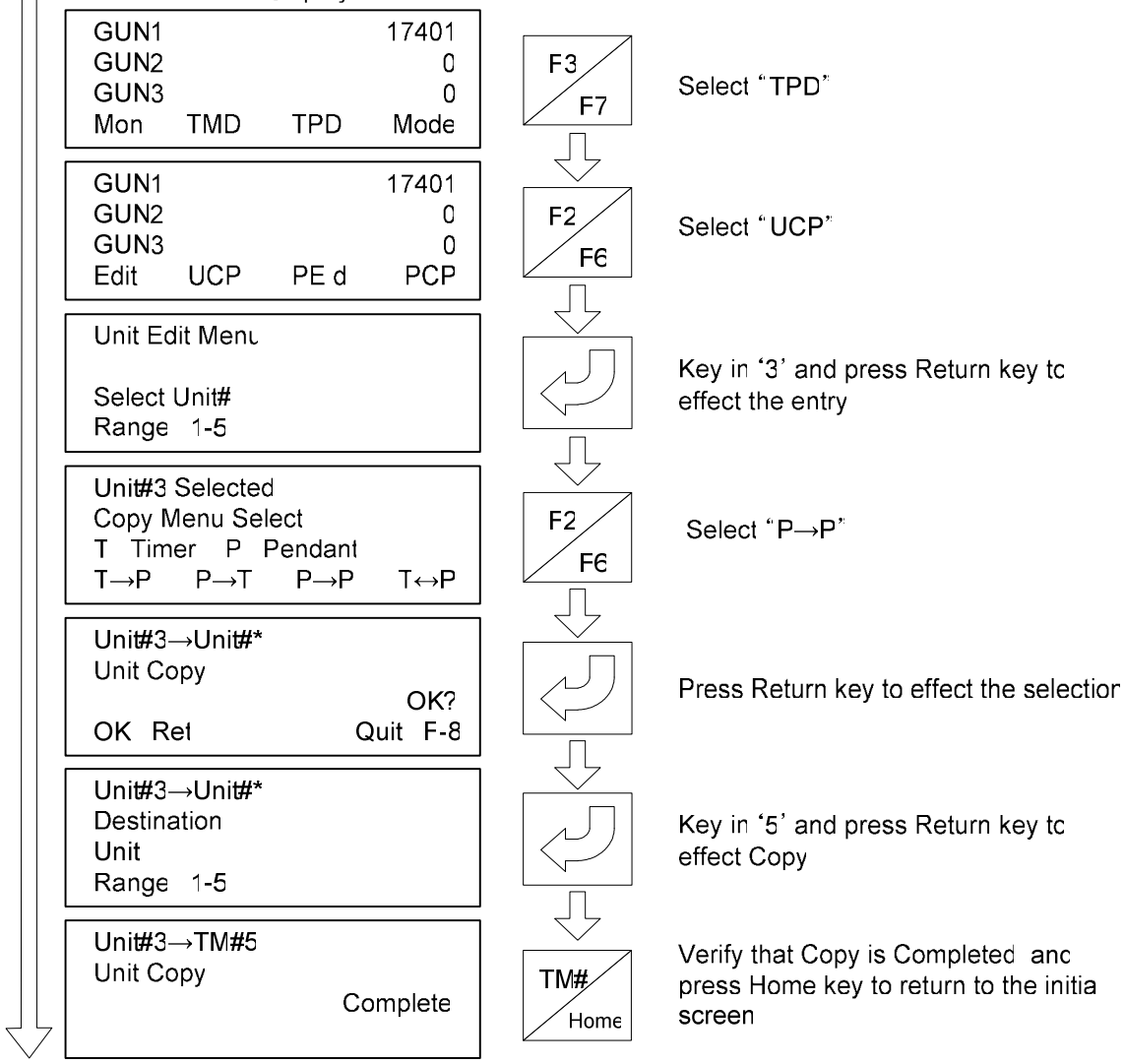

4.10.4 T ←→ P

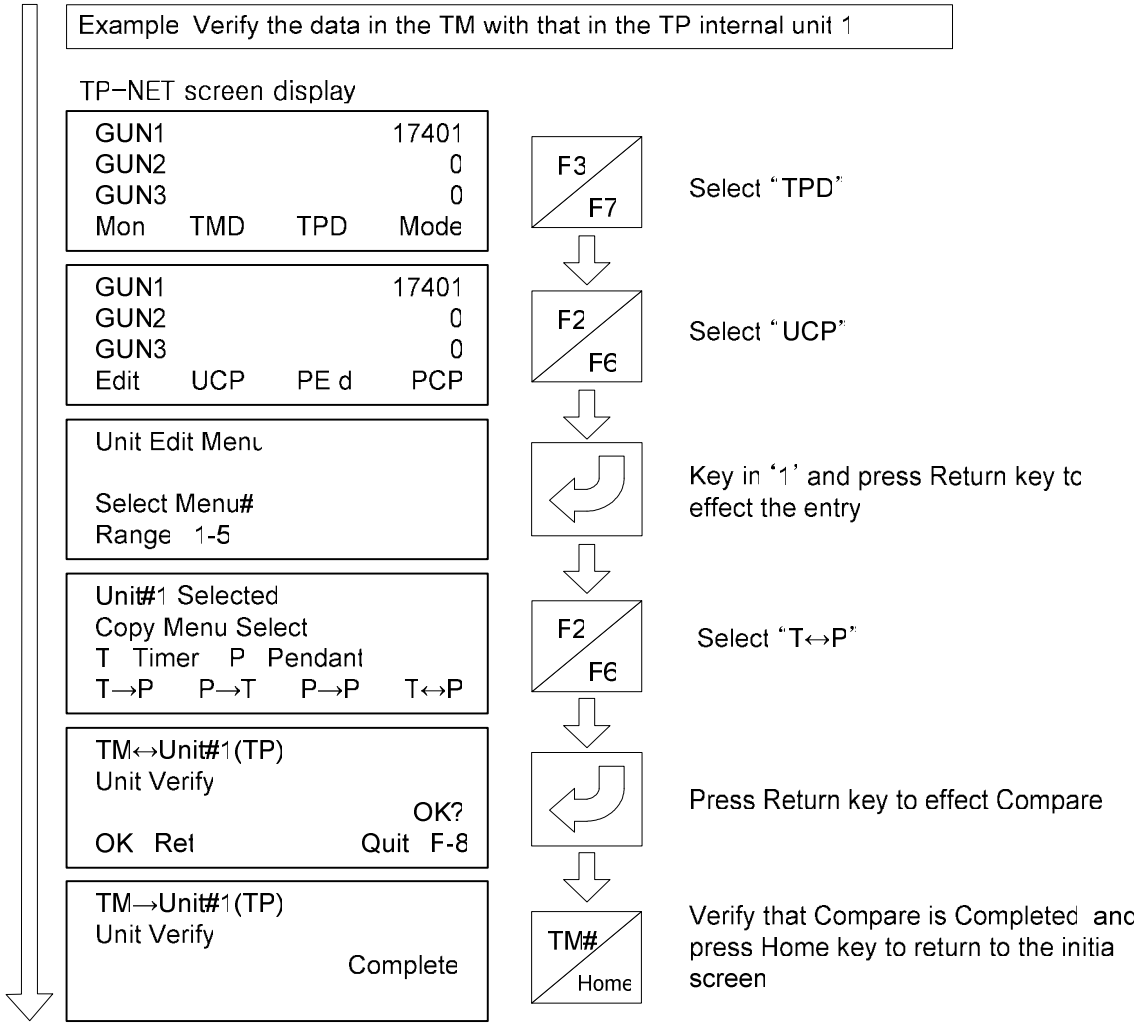
Example Verify the data in the TM with that in the TP internal unit 1
TP-NET screen display
GUN1 17401
GUN2 0
GUN3 0
Mon TMD TPD Mode
GUN1 17401
GUN2 0
GUN3 0
Edit UCP PE d PCP
Unit Edit Menu
Select Menu#
Range 1-5
Unit#1 Selected
Copy Menu Select
T Timer P Pendant
T→P P→T P→P T↔P
TM↔Unit#1(TP)
Unit Verify
OK?
OK Ret Quit F-8
TM→Unit#1(TP)
Unit Verify
Complete
F3
F7
F2
F6
F2
F6
TM#
Home
Select "TPD"
Select "UCP"
Key in '1' and press Return key to effect the entry
Select "T↔P"
Press Return key to effect Compare
Verify that Compare is Completed and press Home key to return to the initial screen

4.11 Confirmation of the alarm history

Check the history of past alarms.

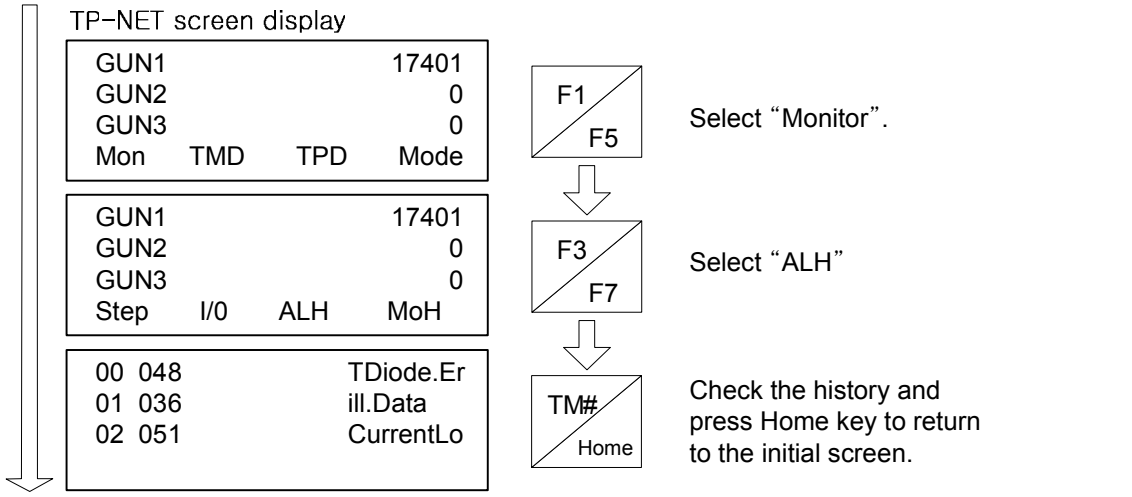

4.12 Gun counter reset

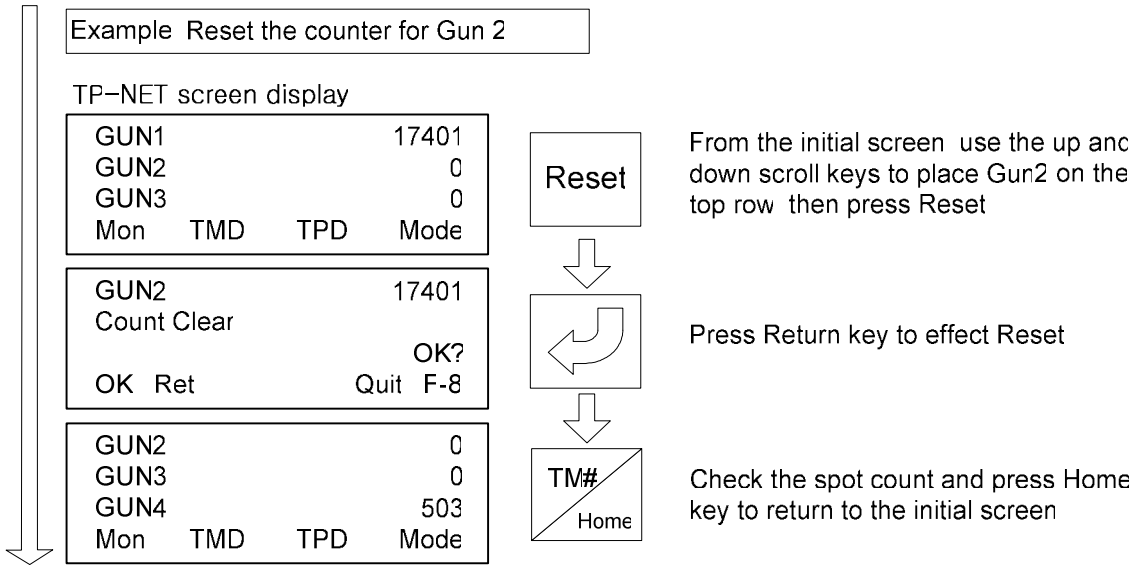

4.13 Step reset

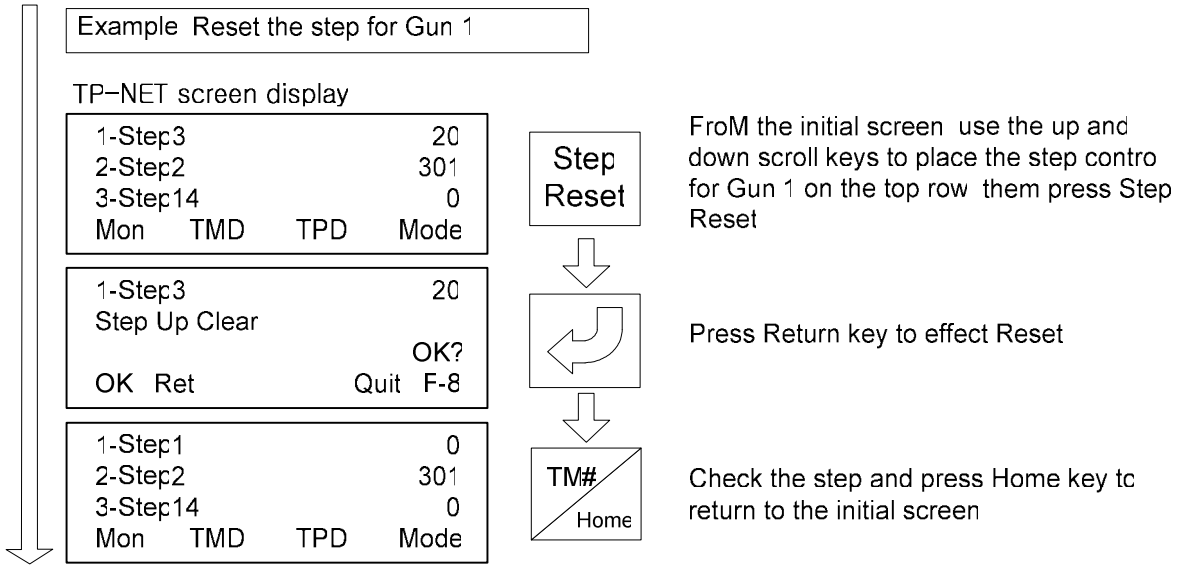

4.14 Step change

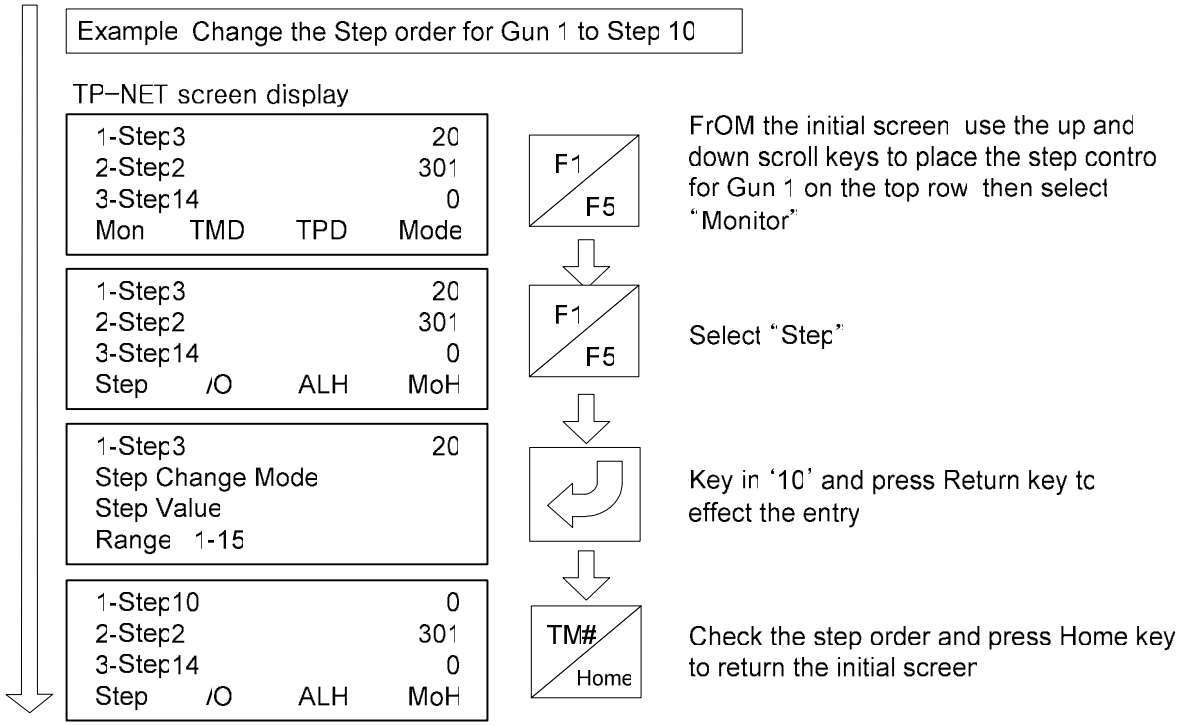

4.15 Checking the I/O information

The TP-NET can be used to check the present input and output information.

When the DeviceNet is not used, the I/O information is as listed below:

I/O information display screen

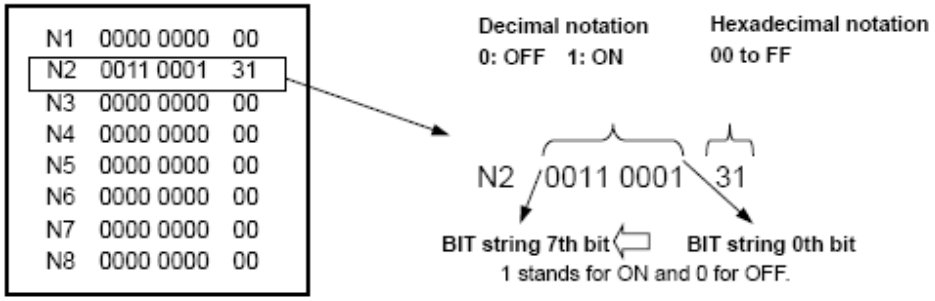

Input/output correspondence chart

(Note: Data given by a crossbar in the block represents internal information.)

Display pos.			Terminal block TB1 output information										
N	1		0	0	0	0	0	0	0	0		0	0

N10	SOL1
N11	SOL2
N12	SOL3 (Retract SOL7)
N13	SOL4 (Retract SOL8)
N14	Alarm output
N15	Hold End output
N16	Step Up Finish output
N17*	Last Step output (Current Detection signal)

Display pos	Terminal block TB1 input info
N20	START SW 1
N21	START SW 2
N22	START SW 3
N23	START SW 4
N24	Group 0
N25	Group 1
N26	Retract START SW 7
N27	Retract START SW 8

Display pos	Terminal block TB1 input info
N30	—
N31	—
N32	—
N33	—
N34	—
N35	—
N36	Weld/No Weld
N37	Alarm Reset

* The Last Step Signal output works instead of current detection signal output when the parameter is effective.
(Note: Data given by a crossbar in the block represents internal information.)

Display pos	Terminal block TB1 input info
N40	—
N41	—
N42	Step Clear
N43	Step Select Clear
N44	Transf. Thermo
N45	SCR Thermo
N46	—
N47	

Display pos	Terminal block TB1 input info
N50	—
N51	—
N52	—
N53	—
N54	Group 3
N55	—
N56	—
N57	—

Display pos	Terminal block TB1 input info
N60	SW Start (LED)
N61	—
N62	—
N63	—
N64	Group 2
N65	—
N66	—
N67	—

When the DeviceNet is used, the I/O information is as listed above.

When the DeviceNet is used, the input and output specifications for TB1 are changed, while the contents of the I/O monitor display are also changed.

See Section “11.15 DeviceNet” for further details.

4.16 Sequence of basic operation

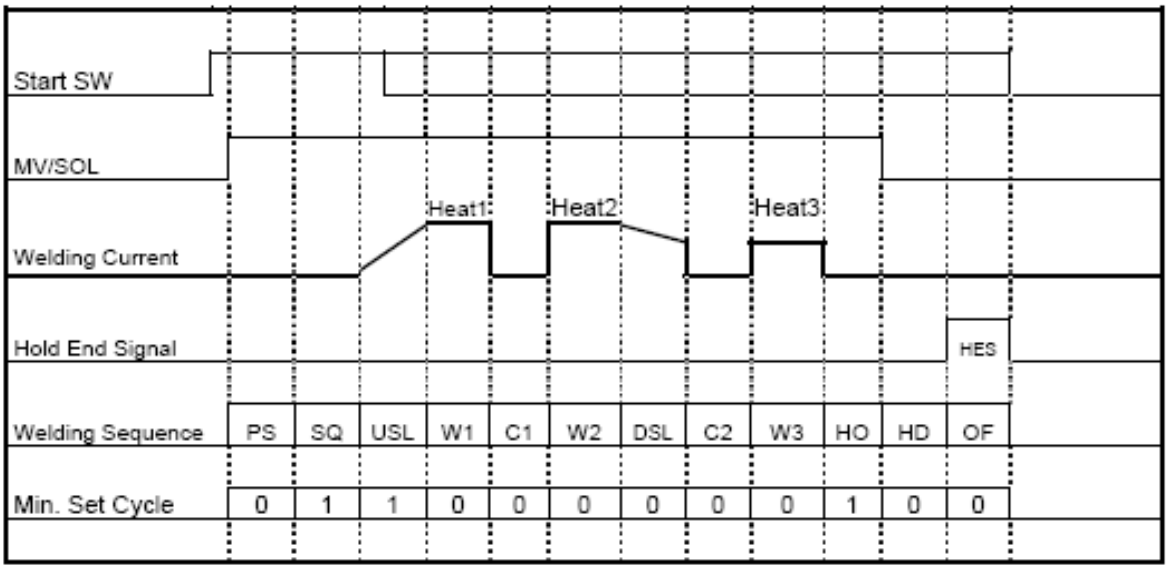

Note 1: If settings on all Weld time segments (W1 to W3) are 0, Setting Data Error is generated. Therefore, Weld Time should be given to any of these segments.

Meaning of abbreviations:

MV/SOL	: Signals from Retract/Solenoid valves		
PS	: Pre-squeeze Time	SQ	: Squeeze Time
USL	: Up-slope Time	W1	: Weld1 Time
C1	: Cool1 Time	W2	: Weld2 Time
DSL	: Down-slope Time	C2	: Cool2 Time
W3	: Weld3 Time	HO	: Hold Time
OF	: Off Time	HES	: Hold End signal output(Minimum 4 cyc

5. DP-NET OPERATION

Operations from the DP-NET (Display Pendant):

1. Welding result monitor
2. Check on the welding conditions (Changes to them cannot be made.)
3. Check on the I/O information (BIT information)
4. Display and history of alarms
5. Spot count and reset
6. Step order count, reset and change

Layout and functions of the control buttons

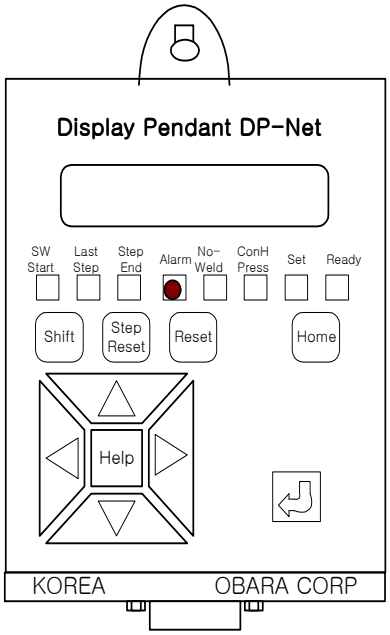

Details of buttons on the control panel:

Button name	Function and operation
Step Reset	Clears the step value counter with the step function enabled.
Reset	- Resets an alarm that has occurred. - Clears the counter with the spot count on display. - Clears the alarm history on display. - Suspends operations.
Home	Allows return to the initial screen that appeared upon power-on.
↑↓←→	Selects the onscreen scroll direction.
Shift	Selects I/O information, etc. (Shit + Direction key).

Indicator lamps: (Indicates the controller status)

Name	Function and operation
Indicator lamps	The same as the indicators on the TP-NET.

6. MAINTENANCE

Before starting maintenance, this instruction manual should be thoroughly read to become familiar with the job.

6.1 Precautions for maintenance

CAUTION

1. First, turn off the power and make sure that the welding current is off, using a voltmeter (500 VAC range).

2. Even when the voltage is being applied, the POWER lamp might be off due to burn-out. When this lamp is to be used to check the power-on/off states, check that the lit lamp goes out when the main power is turned off.
(Check the states both ways.)

3. If maintenance service must be performed with the POWER ON, do not try to touch the following parts and cables because high voltage is present in such areas.
The maintenance personnel should place an insulating rubber sheet under his/her feet and wear insulated gloves before servicing the equipment. Accidental contact can cause an electric shock, resulting in fatal or serious injuries.
   (1) Areas near TB0
   (2) Areas near SCR
   (3) PC-1107 firing-circuit
   (4) Resistors
   (5) Capacitors
   (6) Fuse
   (7) Areas near lamp

4. If you have to reach your hand into the housing, wear insulated gloves, and do not expose your skin during service. In some cases, you may suffer from injuries such as cuts on the hand by sharp edges of parts.

5. Do not perform maintenance in a dimly lit place; otherwise incorrect operations and contact with hazardous parts may be induced, causing serious accidents.

6. Do not perform maintenance in a dimly lit place; otherwise incorrect operations and contact with hazardous parts may be induced, causing serious accidents.

7. Even when performing test conduction, make sure that cooling water is supplied at a flow rate of 6L/min. If test conduction is performed in the absence of the required flow rate, cable hose may overheat, or in some cases, be cracked or damaged.

7. TROUBLESHOOTING

When no alarms are detected:

POWER lamp does not illuminate.		
Fault status	Probable cause	Corrective action
Circuit breaker for the Welding power is tripped.	Incorrect R.S.T. wiring connections.	Check the cable connection referring to Section "2 INSTALLATION AND CONNECTIONS".
Power cable is normally connected.	Poor contact of the connector (CN2) in the timer.	Check the connector.
	Faulty POWER lamp.	Replace the POWER lamp.
	Circuit breaker tripped.	Reset the circuit breaker. Check the cable connection referring to Section 2.
	Circuit protector on the board tripped.	Press the button above the circuit protector. Check the cable connection referring to Section 2.

Conduction is not triggered in spite of Start SW.		
Fault status	Probable cause	Corrective action
POWER lamp remains lit. No alarm indication.	Break in DeviceNet communication cable. Connector dislodged.	Check Timeout Error, then check the cable and replace, if required.
	Parameter "Pq Remote I/O" set to OFF,	Set the parameter "Pq Remote I/O" to ON.
	Check the timer mode setting. Check for No Weld or Conti. Press. mode.	Check the setting using the TP-NET.
	DeviceNet timer input "Conduction On" not set to ON.	Check the DeviceNet communication data.
	Break in wiring or cross wiring to A17-B17 safety SW in the TB1 terminal block.	Check the wiring.
	Solenoid valve wiring is normal but solenoid valve not actuated	Faulty solenoid valve. Replace the valve.
	The solenoid valves are actuated.	Recheck the air circuit.

TP-NET / DP-NET screen does not appear.		
Fault status	Probable cause	Corrective action
Timer POWER lamp is on but there is no display on the screen.	Faulty connection cable.	Replace the cable.
	Faulty TP-NET/DP-NET unit.	Replace the unit.
	Circuit protector tripped.	Press the button above the circuit protector. Check the cable connection referring to Section 2.

The intended timer No. is not displayed on the TP-NET / DP-NET screen.		
Fault status	Probable cause	Corrective action
The intended timer No. not displayed.	Break in or fault of the connection cable.	Check the connecting cable and replace, if required.
	The timer to be selected is not yet turned on.	Turn on the power.
	There is a timer having the same timer No.	Change the parameter “Po TM NO.” → Change the timer No. Connect the TP-NET singly to the timer the number of which is to be changed. Then, turn on the power while holding down the “HOME” key or unplug and then plug the TP cable to initialize the timer. When it is normally started, enter the parameter edit mode and change the timer No.

Contents of alarms and their corrective actions

Danger level

Code No.	Name	Indication	Class
032	Transformer Thermo Operation	Trans Over Heat	Danger
Detection	Detected regardless of conduction or idling when the Trans Thermo SW Information has been issued.		
Probable cause and remedy	1. Review duty cycle. 2. Too low a flow rate of cooling water. 3. Increase the rated capacity of transformer. 4. Replace the transformer.		

Code No.	Name	Indication	Class
033	POWER Frequency Error	Illegal Freq.	Danger
Detection	Discrimination between 50 and 60Hz upon power-on. Detected when the frequency is neither 50 nor 60Hz.		
Probable cause and remedy	Check the power supply equipment.		

Code No.	Name	Indication	Class
034	Parameter Error	Illegal Param.	Danger
Detection	Set parameter data is corrupted.		
Probable cause and remedy	1. Correct and check the parameter. 2. Replace the PCB.		

Code No.	Name	Indication	Class
036	Setting Data ERror	Illegal Data	Danger
Detection	When set data in the activated series is out of the range and when all the W1 to W3 Welding time periods are zero.		
Probable cause and remedy	Correct and check the welding conditions.		

Code No.	Name	Indication	Class
037	Current Setting Error	Illegal Curr.	Danger
Detection	Detected when the current value in the activated series is 0 and the weld time is non-zero.		
Probable cause and remedy	Correct and check the welding conditions.		

Code No.	Name	Indication	Class
038	AD Error1	AD1 Error	Danger
Detection	Error in current measurement.		
Probable cause and remedy	1. Replace the Timer. 2. Replace the CT.		

Code No.	Name	Indication	Class
038	AD Error2	AD2 Error	Danger
Detection	Error in current measurement.		
Probable cause and remedy	1. Replace the Timer.		

Code No.	Name	Indication	Class
041	DeviceNet Error Detection	DN-PCB Error	Danger
Detection	DeviceNet Error has been received and/or detected by the timer. Automatic reset after recovery from the error.		
Probable cause and remedy	1. Faulty UCS board in the timer: Replace. 2. DeviceNet error occurring outside the timer.		

Code No.	Name	Indication	Class
043	SCR Thermo	SCR O.Heat	Danger
Detection	Detected when the SCR thermal relay has been tripped regardless of conduction or idling.		
Probable cause and remedy	1. Review duty cycle. 2. Too low a flow rate of cooling water (for water cooling). 3. Review environment around the FIN (for air cooling).		

Code No.	Name	Indication	Class
044	SCR Short	SCR Break	Danger
Detection	Detected when there is conduction within HOLD time.		
Probable cause and remedy	1. Faulty SCR/board in the timer: Replace.		

Code No.	Name	Indication	Class
046	Line Voltage Low	Line V.Drop	Danger
Detection	Detected when the line voltage being monitored has dropped below 75% of the reference voltage.		
Probable cause and remedy	1. Too low a line voltage from power supply equipment Review the equipment.		

Code No.	Name	Indication	Class
047	Lint Voltage High	Line V.Over	Danger
Detection	Detected when the line voltage being monitored has exceeded 125% of the reference voltage.		
Probable cause and remedy	1. High voltage of supply power from power equipment: Review the power equipment.		

Warning level

Code No.	Name	Indication	Class
050	No Current	No Current	Warning
Detection	Detected when the current is at 0 or the cycle number of conduction is 0.		
Probable cause and remedy	1. Break in secondary cable: Replace the secondary cable. 2. Faulty drive board of the timer: Replace the drive board. 3. Break in gate wire to the SCR or poor contact: Check the wiring. 4. Replace the SCR		

Code No.	Name	Indication	Class
051	Current Low	Current Low	Warning
Detection	Detected when the measured current value has dropped below the set current.		
Probable cause and remedy	1. Too large voltage fluctuations. Use a power cable of larger size. Check the power receiving equipment. 2. Deteriorated secondary cable: Replace the secondary cable. 3. Current value and current low value settings: Review the welding condition settings. 4. Significant difference in the trans turn ratio setting: Review the welding conditions.		

Code No.	Name	Indication	Class
053	Current High	Current High	Warning
Detection	Detected when the measured current value has exceeded the set current.		
Probable cause and remedy	1. Current value and current low value settings: Review the welding condition settings 2. Significant difference in the trans turn ratio setting: Review the welding conditions. 3. Unstable power voltage: Check the power receiving equipment.		

Code No.	Name	Indication	Class
055	1 Cycle High Error	PeakCur High	Warning
Detection	Detected when the measured current value has exceeded the error detection range for “1 Cycle High Current” welding condition with respect to the step up added current settings on HEAT1, 2 and 3.		
Probable cause and remedy	1. Conduction during pressurization: Insufficient “Squeeze Time” welding condition. 2. Range setting of “1 Cycle High Current” welding condition: Review the welding condition setting. 3. Significant fluctuations in power voltage: Check the power receiving equipment. Check the power balance.		

Caution level

Code No.	Name	Indication	Class
060	Current Unbalance	Cur. Unbalance	Caution
Detection	Detected when the top count does not match the bottom count of welding current.		
Probable cause and remedy	1. Break in gate wire to the SCR or poor contact: Check the wiring and replace the SCR 2. Fault in the main board firing-circuit: Replace the board. 3. Check the squeeze time. (In some cases, this error may be indicated in response to conduction during gun operation).		

Code No.	Name	Indication	Class
061 to 063	Conduction Cycles W1-3 Low	W1-3 Cyc. Few	Caution
Detection	Detected when current is not applied the preset number of W1 to 3 cycles.		
Probable cause and remedy	1. Conduction has been made before the end of pressurization or in other cases: Check the welding sequence.		

Code No.	Name	Indication	Class
065	Flow Ratio High	Flow% Over	Caution
Detection	Detected when the number of times the flow measured in current measurement is greater than the welding condition setting "C.Flow" has exceeded the "CF.Count" welding condition setting.		
Probable cause and remedy	1. Deteriorated secondary cable: Replace the secondary cable. 2. Current value setting too high: Check the welding current setting. 3. Incorrect "C.Flow" setting: Review the setting. 4. Too large voltage fluctuations. Use a power cable of larger size. Check the power receiving equipment. Review the duty cycle. 5. Significant difference in the transformer turn setting: Check the setting.		

Indication level

Code No.	Name	Indication	Class
080 to 095	START SW 0-15 Error	Ill. SW0-15	Alarm Message
Detection	The state of the activation switches is checked upon power-on of the timer. If ON, a malfunctioning activation switch is indicated.		
Probable cause and remedy	Incorrect Wiring of activation SW: Check the wiring. SW. com. start signal was inputted when activation is to be selected: Review the sequence.		

Code No.	Name	Indication	Class
100	TM Timeout Communication Error	CommT.Out	Alarm Message
Detection	Communication error between TP-NET and timer has been detected.		
Probable cause and remedy	1. Break in pedant cable: Replace the pendant cable. 2. Fault in TP-NET: Replace the TP-NET		

Code No.	Name	Indication	Class
101	TM Error Data Communication Error	CommD.Error	Alarm Message
Detection	Detected when the CRC Error Detection (timeout) has recurred 10 times consecutively.		
Probable cause and remedy	1. Break in TP-NET connection cable: Replace the connection cable.		

Code No.	Name	Indication	Class
110	No Weld	No Weld	Caution(Selection) and alarm Message
Detection	Indicated when an activation input has been received with the timer's Mode select set to "No Weld mode"		
Probable cause and remedy	1. Cancel the "No Weld mode" through the timer's Mode Select. 2. The wiring for the Terminal Block is confirmed.		

Code No.	Name	Indication	Class
111	Conti.Press	No Weld2	Caution(Selection) and alarm Message
Detection	Indicated when an activation input has been received with the timer's Mode Select set to "Conti. Press mode".		
Probable cause and remedy	1. Cancel the "Conti. Press mode" through the timer's Mode Select.		

Special level

Code No.	Name	Indication	Class
035	CPU Operation Error	CPU Error	Alarm Message (Cannot be indicated in same cases)
Detection	Detected when a watchdog has been detected in the equipment. (In certain cases, this alarm cannot be indicated with the alarm contact output only.)		
Probable cause and remedy	1. Error in board: Replace the board.		

8. ALARMS

8.1 Classification of the alarms

Depending on the details of alarms, the alarms are divided into the following classes:

Danger:

Trans Over Heat	AD2 Error
Illegal Frequency	DN-PCB Error
Illegal param	SCR Over Heat
Illegal Data	SCR Break
Illegal Current	LineV. Drop
AD1 Error	LineV. Over

경고 경보:

No Current	Current High
Current Low	PeakCur High

주의 경보:

Cur. Unbalance	W1-3 Cyc. Few
Flow% Over	

표시 경보:

III.SW 0-15	NO Weld
CommT. Out	NO Weld2
CommD. Error	OP-TP Error

특이 경보:

CPU Operation Error

8.2 Settings associated with alarms

The welding condition and parameter setting associated with alarms are shown below.
See Section “4.5 Description of the parameters” for details.

Parameter settings associated with alarms	Welding condition setting associated with alarms
Alarm Out Hold Out HoldA Dly ALM Mode Caution TestW ALM	C.Flow+ CF.Count Curr.Low Curr.High V.Limit PeakCurr

8.3 Timing chart of alarm sequence

Alarm handling upon occurrence of alarms:.

Danger : After detection of this level of alarm, the alarm information is outputted and all the sequences are stopped. No Hold End output is provided.

Warning : After detection of this level of alarm, the output sequence depends on the parameter settings. The Hold End output depends on the parameter settings

Caution : After detection of this level of alarm, the alarm information is sorted into either warning or indication. The Hold End output depends on the parameter settings after this sorting.

Indication : After detection of this level of alarm, the alarm information is not outputted. Its deals are indicated on the TP-NET. The Hold End output is provided.

Special : This provides for alarm detection means for the CPU and circuits. The alarm contact output is only provided. A CPU error has been detected when there is no alarm indication on the TP-NET.

The Warning level has different outputs of alarm and Hold End signals depending on the parameter setting. Refer to the timing charts below.

Sequence upon generation of warning level of alarms:
See Section "4.16 Basic operation sequence" for welding sequence abbreviations..

(1) Parameter settings: HoldA Dly - ON
Hold Out - ON
ALM Mode - 0 (Alarm pulse output)

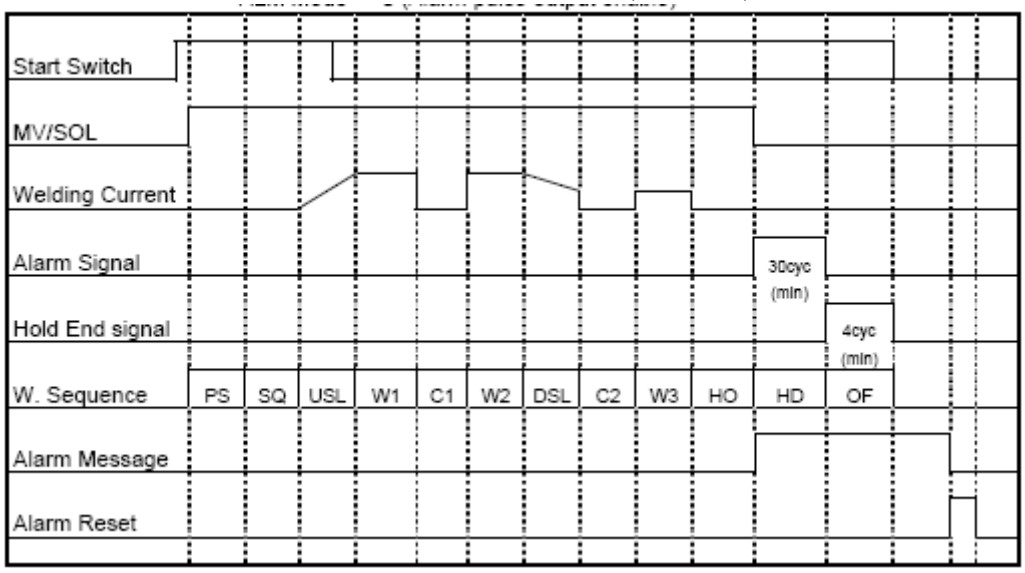

Alarm Signal: Minimum 30cyc or HD time.
Hold End signal: Minimum 4cyc or OF time or Start SW hold.

(2) Parameter settings: HoldA Dly – ON
Hold Out – ON
ALM Mode – 1 (Alarm Continuous output, Conduction possible)

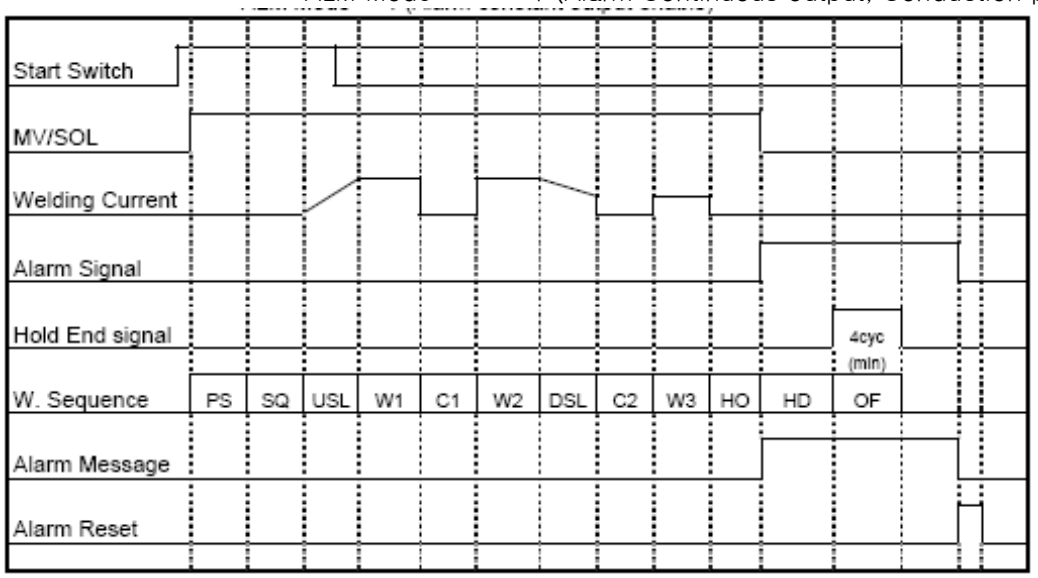

The next Start signal can be accepted Without Alarm Reset input.

(3) Parameter settings: HoldA Dly – ON
Hold Out – ON
ALM Mode – 2 (Alarm Continuous output, Wait for Reset)

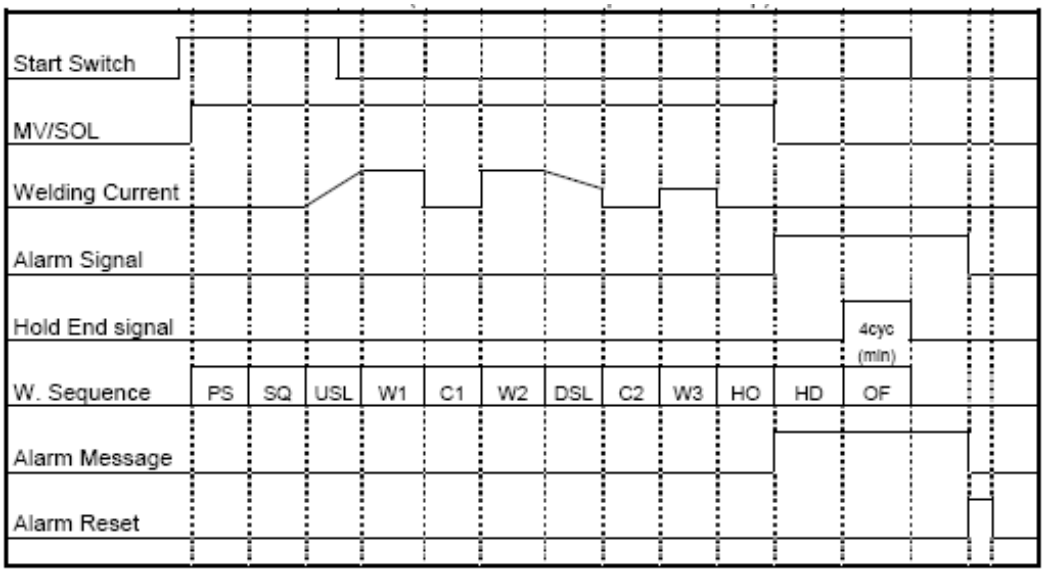

The next Start signal cannot be accepted without Alarm Reset input. Wait for Reset.

(4) Parameter settings: HoldA Dly – OFF
Hold Out – ON
ALM Mode – 3 (No Alarm output, Indication only)

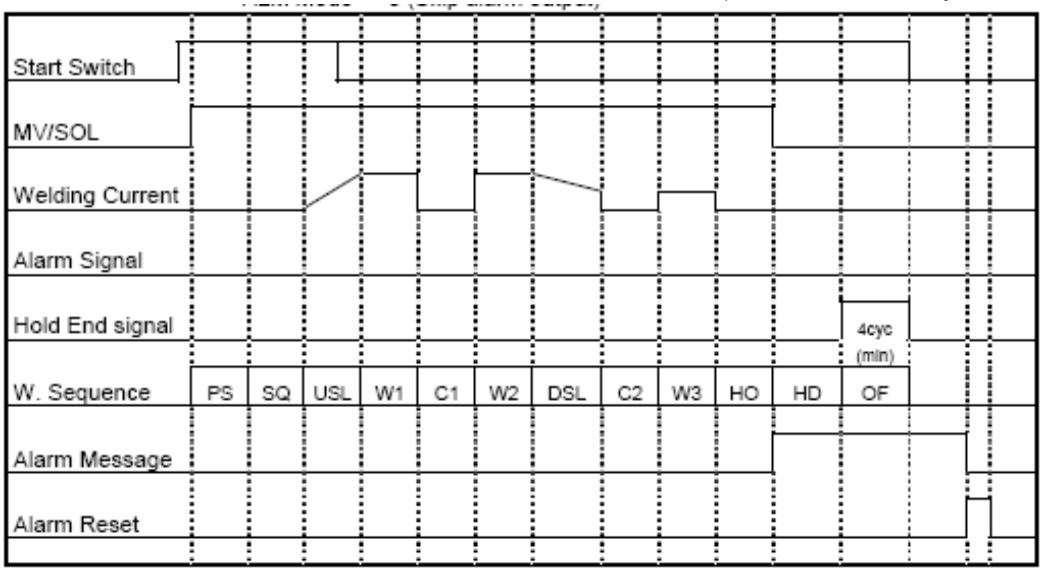

(5) Parameter settings: HoldA Dly – ON
Hold Out – OFF
ALM Mode – 0 (Alarm Pulse output)

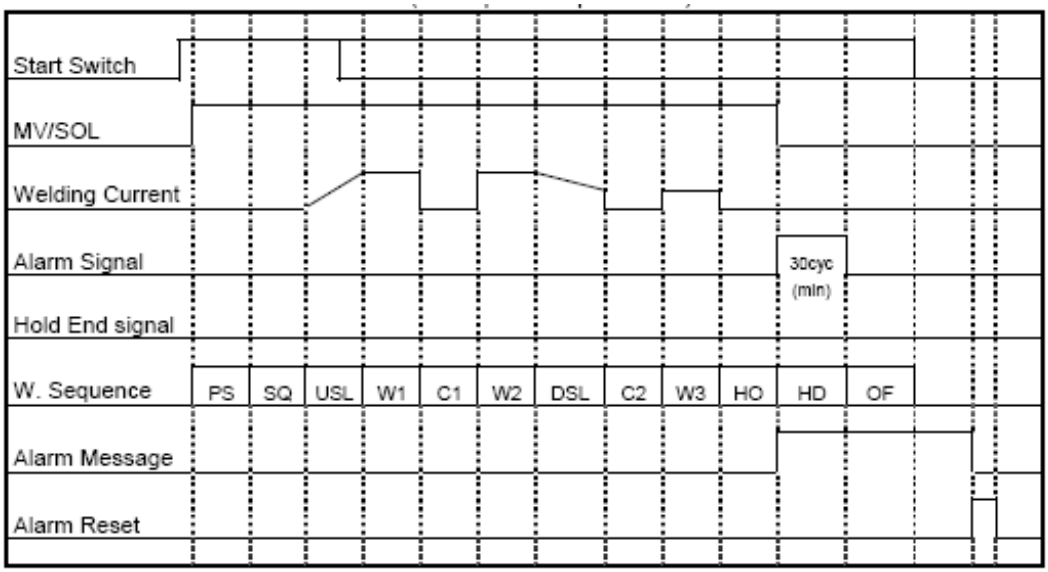

(6) Parameter settings: HoldA Dly – OFF
Hold Out – ON
ALM Mode – 0 (Alarm Pulse output)

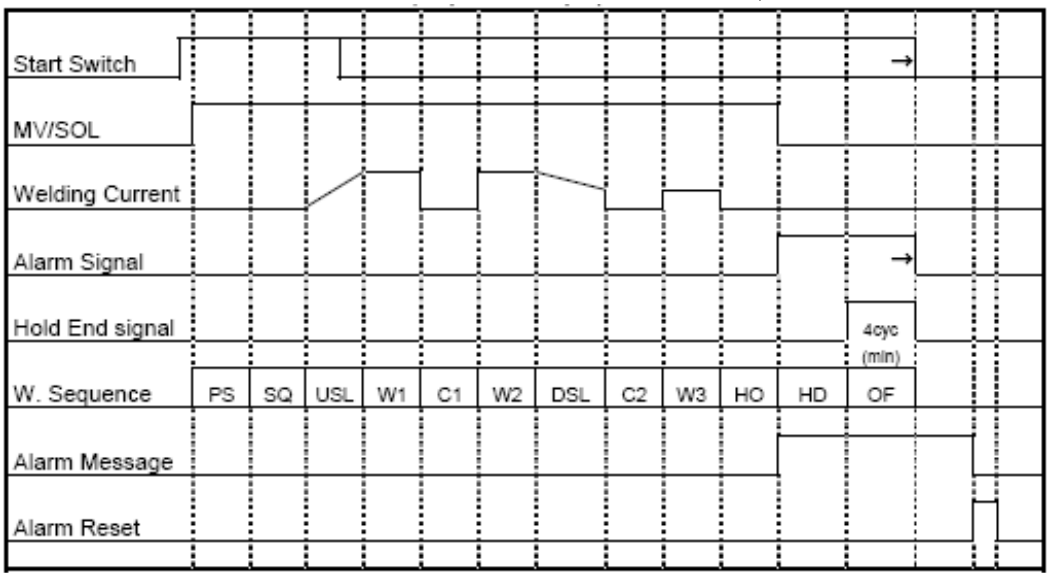

(7) Parameter settings: HoldA Dly – OFF
Hold Out – OFF
ALM Mode – 0 (Alarm Pulse output)

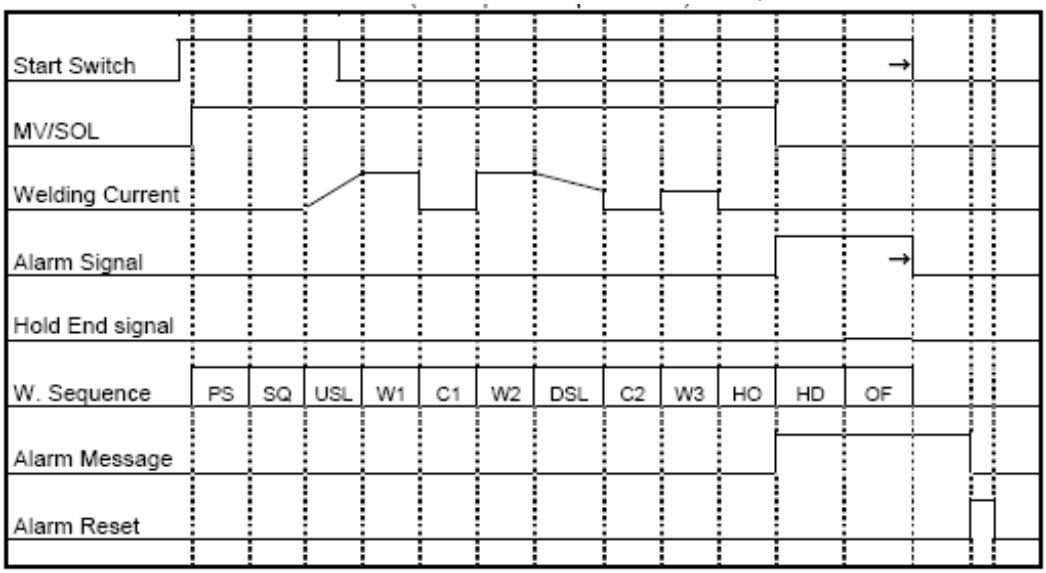

Sequence upon generation of indication level of alarms:
After completion of hold time, the alarm is indicated on the TP-NET screen.

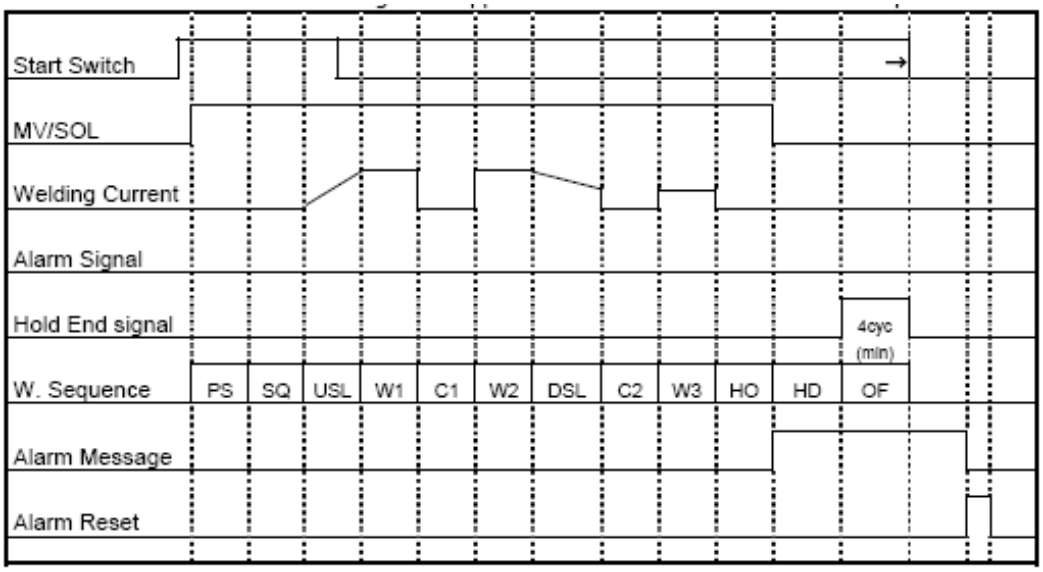

9. INSPECTION

Checks at the start of each day's operation

When starting welding operations, perform the following checks in order to ensure safe operation.

Check items	Specified or standard condition
POWER lamp ON check	Make sure that the lamp is turned ON/OFF by turning POWER ON/OFF
SCR	There must be no water leakage.
Cooling water check	Make sure that water is supplied at the specified flow rate.

Inspection and maintenance

Regularly perform the following inspections to ensure that the equipment is safely used.

Inspection items	Specified or standard condition	Frequency				
		Day	Week	Month	Year	As needed
Setup data	Ensure that the specified welding data is set up through TP-NET.					O
	Ensure that the specified parameters are set up through TP-NET.					O
Measure the welding current	Make sure that the specified current is flowing.					O
Inspect signal input and output wires for proper connection	No looseness.			O		
Inspect signal input and output wires for damage	No damage or breaks.			O		
Inspect the grounding wire for proper connection.	No looseness.			O		
Inspect the grounding wire for connection.	No damage or breaks.			O		
Inspect the cable Connections to POWER input and the welding transformer.	No looseness.			O		
Inspect the cables to the POWER input and the welding transformer for damage.	No damage or breaks.			O		
Inspect the inside of the unit.	Cleanliness kept inside the unit.				O	
Check the cooling water channel.	Water channel adequately assured.				O	

Product Warranty

The maximum warranty period which this product is serviced without charge is two (2) years. However, in the event that the unit fails due to human errors or natural disasters, the warranty coverage becomes void even when the product has been used for less than 2 years.

Examples of human errors:

- Cross wiring
- Wire shorts and breaks in cable by external force
- Unit moistened with discharge water.
- Fall or turnover due to inadequate installation.
- Intentional destruction of the unit.
- Intentional modifications

Examples of natural disasters:

- Damage caused by lightening and earthquake.
- Fire and flood.

10. STORGE

To store the timer, observe the following instructions:

1. Drain the water off from SCR by air blowing.
2. Make sure that the inside of the mainframe is dust free.
3. Place the timer in its original plastic bag so as to prevent penetration of dust into the timer.
4. Store the timer in a place where temperature is between 0 and 60℃ with 70% or less humidity and condensation of humidity will not occur. Avoid locations receive vibrations or direct sunlight.

11. SPECIAL FUNCTIONS

11.1 Pulse Start

Parameter: P4 One Shoot (ON: Trigger Start)

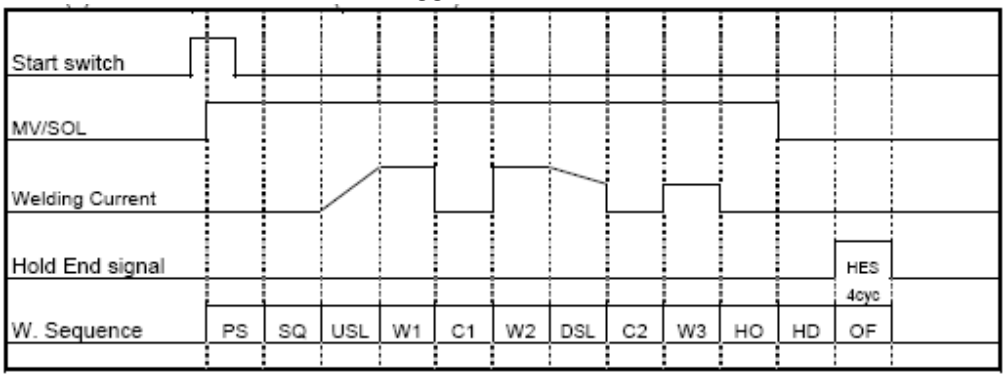

In the case where an START SW is continually held

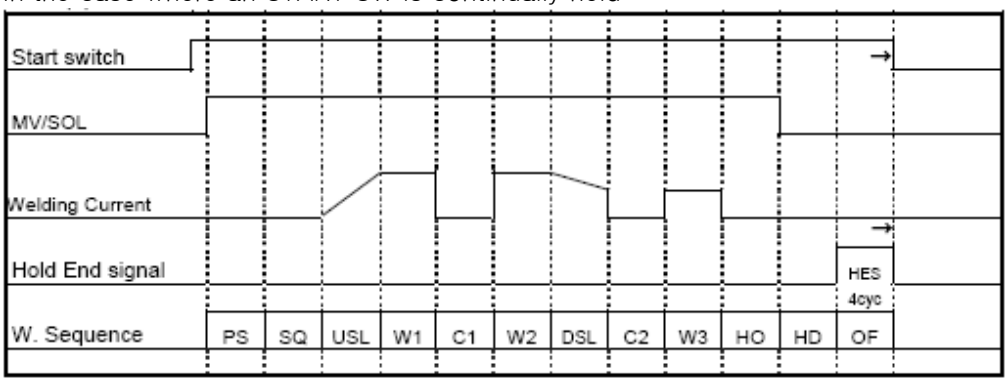

11.2 Pulsation

Parameter: P1 Pulse Sel. ON
Welding Condition: Pulses 1-9 Select
Cool1 and Weld2 are repeated the preset number of times(1 to 9)

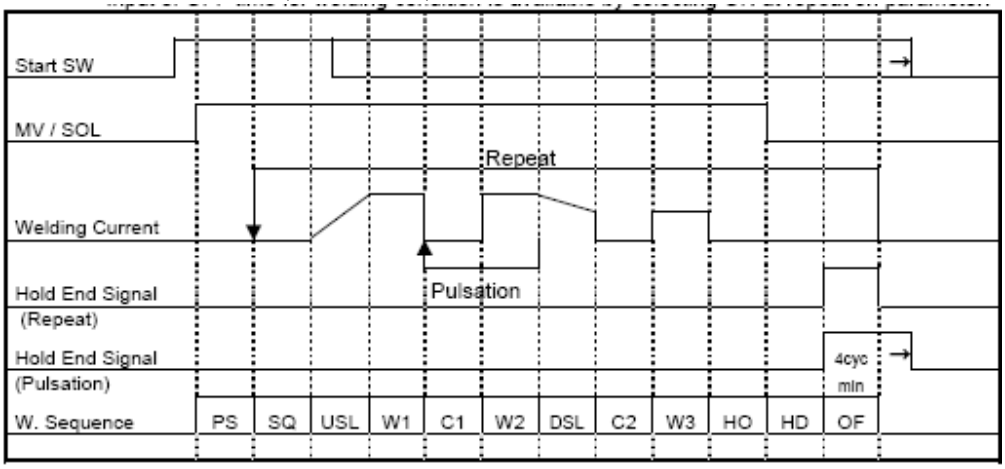

11.3 START SW Preferred function

Parameter: P9 SW Mode
Welding current sequence (top): SW Mode ON
When START SW is turned OFF during a sequence, the sequence beyond the next cool time is Skipped going to the HO (hold) process.
Welding current sequence (bottom): SW Mode OFF
Even when START SW is turned OFF during a sequence, the sequence is not suspended.

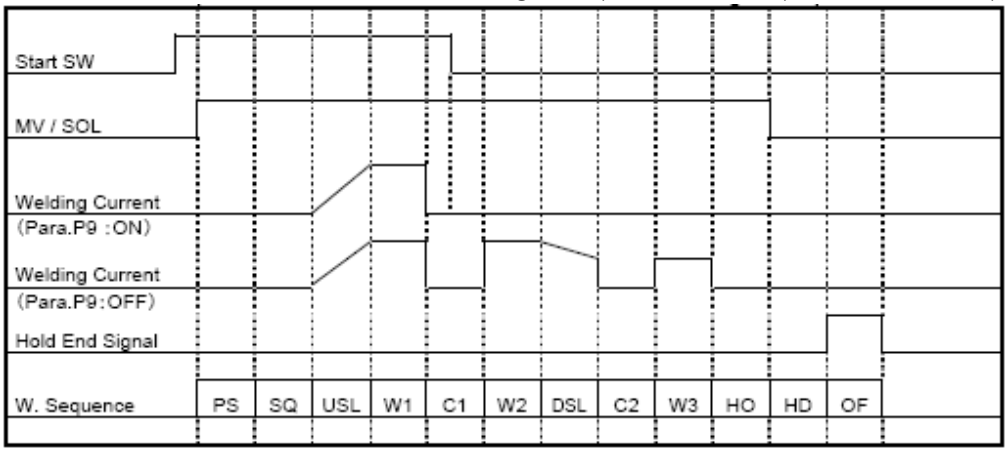

11.4 Re-Weld function

Parameter setting: Pd Reweld ON (Enabled)

When the alarm “Current Low” or “Compensation Voltage Low” is detected using the above Setting, conduction is performed again.

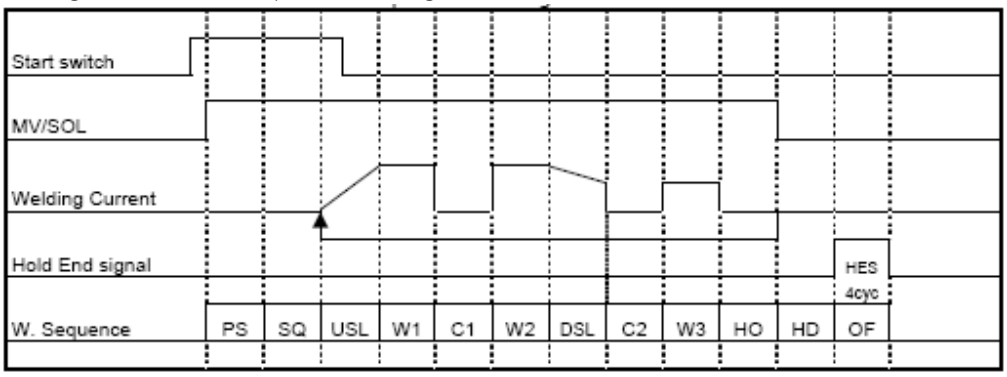

Note: The 2nd reweld is not performed.

11.5 Sequence to discover short-circuited cable.

Parameter to discover short-circuited cable : Weld enable / disable select (3: Cable short check enable)

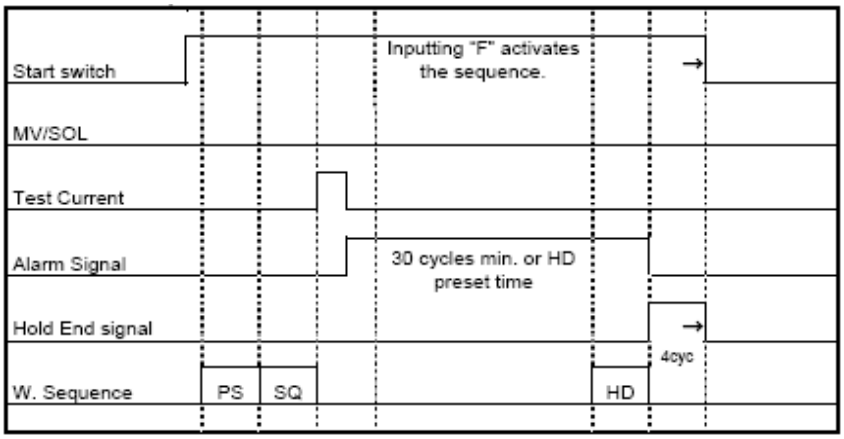

11.6 Current Detection function

Current Detection Signal output function: Parameter “Pr CurDetect” Select (Note 1)
Current Detection Signal sequence (top)……”Pr CurDect ON (Enabled)
With “Pr CurDetect” ON, the Current Detection signal is outputted.
Output conditions: Except for Welding Alarm or No Weld and when the welding current is Detected.
The Last Step signal from TB1 is not outputted. TP Indication only.
Current Detection Signal sequence (bottom)……”Pr CurDetect” OFF (Disabled)
With “Pr CurDetect” OFF, there is not conduction Detection Signal output.
At this time, when “P8 Step Types” 1 and 2 have been selected (Step Up Enabled), the Last Step signal is outputted from TB1.

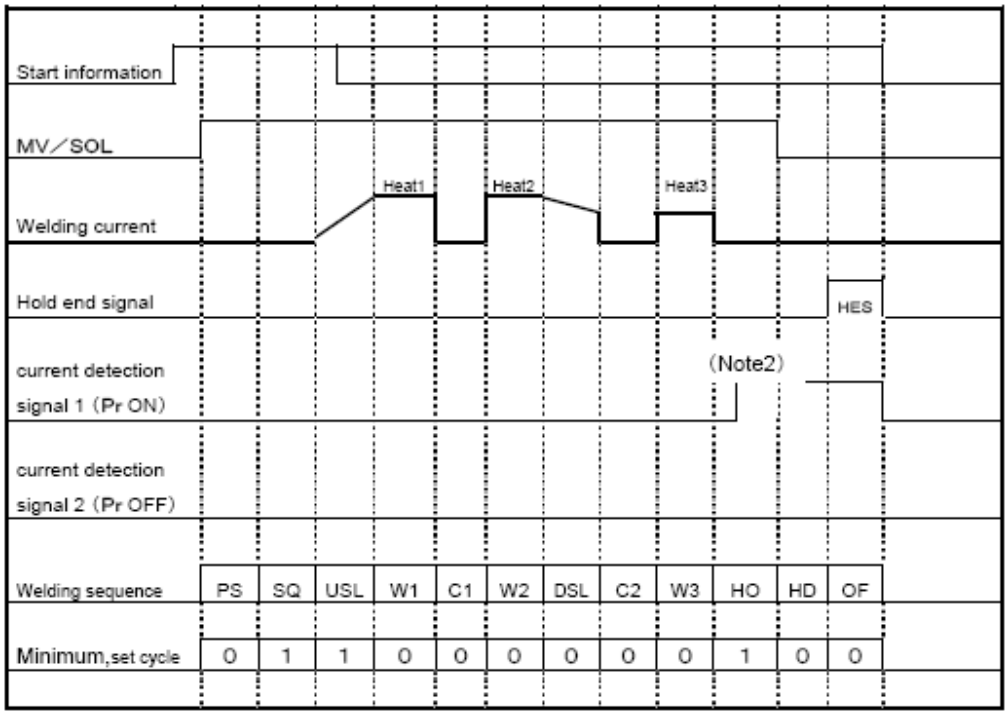

Note 1: With Remote I/O Enabled, terminal block TB1 is used as the remote I/O terminal block. Therefore, the Current Detection signal is not reaching the terminal block TB1.
Note 2: The Current Detection signal detects the welding current and is outputted based on normal operation. When Current Alarm or No Weld is detected, the signal is not outputted. The output timing is approx. 1cyc the HOLD time process starts.

11.7 Step Up control

11.7.1 Step Up control

The Step Up function provides compensation for a reduction in current density caused by worn electrodes.

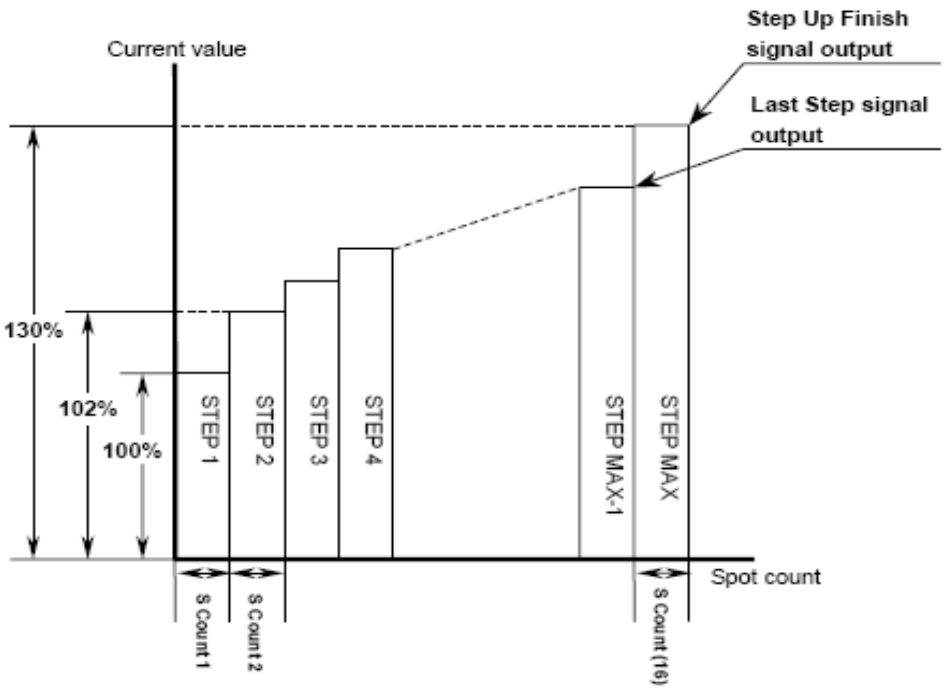

CAUTION

Step Up Finish process: "Last Step signal" is outputted from B6 on TB1 at a Switch to the last step order and "Step Up Finish signal" is outputted from B5 on TB1 at the end of last step.

Notes 1): With the parameter "Pr CurDetect" Enabled, Conduction Detection signal is outputted from B6 on TB1 and therefore Last Step signal is not outputted.

2): With the parameter "Ps StepF2Out" Enabled, Step2's Step. Completion signal is outputted from B6 on TB1 and therefore Last Step signal is not outputted.

3): With the parameter "Ps StepF2out" Enabled, Step1's Step Completion signal is outputted from B5 on TB1 and Other Series' Step Completion signals are not outputted.

4): The parameters "Pr CurDetect" and "Ps StepF2out" cannot be used when both are "ON". Take care of their settings.

11.7.2 Setting procedure for using the Step Up function

1) Parameter : Step Type
Select the desired Step Up method. See the typical settings in the chart below.
0: Step Up function Disabled 1: Step Up Series GUN Series
2: Step Up Series All Series

2) Parameter : Linear Up
Select either Step order control or Linear (linear interpolation) control.
ON: Linear Up control OFF: Step Up control

3) Parameter : Max Step
Set the maximum step number in the range of 2 to 16.

4) Parameter : Gun Sel
Set the maximum gun No.

5) Welding condition : Gun Sel.
Guns are assigned to the activation series and the following welding condition are set.

6) Welding conditions Step Up rate setting
Set the conditions for each gun according to the parameter Step Up Series Select or set the conditions for each gun selected in the series.(See the chart below.)

7) Welding conditions : Set the step count.
This setting determines the spot count after completion of which the step is raised to the upper order.

8) Welding conditions : Set the step return value.
These conditions are set when the step is required to return to a lower order.

Step Up Series Select

Sample Settings: Step Up GUN series

Item	Activation sequence					→	F
	1	2	3	4	5		
Gun Sel	1	2	2	2	4		4
Prsquez	0	0	0	0	0		0
Squeeze	20	30	30	30	35		35
Weld1	0	5	0	0	10		5
Cool1	0	0	0	0	0		0
Weld2	5	5	10	10	10		5
↓							
Press V3	0	0	0	0	0		0
	0	0	0	0	0		0
Step Up1	100	100	100	100			
Step Up2	102	102	103	103			
Step Up3	104	104	106	106			
Step Up4	106	106	109	109			
↓							
Step Up16	120	120	130	130			
	Gun No.						
	1	2	3	4			
Step Count1	300	200	150	200			
Step Count2	350	250	200	300			
Step Count3	350	250	200	300			
↓							
Step Count16	300	300	200	300			

From the left, the step up rate is set in sequence for guns 1, 2, 3 and 4.

Sample Settings: Step Up all series

Item	Activation sequence					→	F
	1	2	3	4	5		
Gun Sel	1	2	2	2	4		4
Prsquez	0	0	0	0	0		0
Squeeze	20	30	30	30	35		35
Weld1	0	5	0	0	10		5
Cool1	0	0	0	0	0		0
Weld2	5	5	10	10	10		5
↓							
PressV3	0	0	0	0	0		0
	0	0	0	0	0		0
StepUp1	100	100	100	100			
StepUp2	102	102	103	103			
StepUp3	104	104	106	106			
StepUp4	106	106	109	109			
↓							
StepUp16	120	120	130	130			
	Gun No.						
	1	2	3	4			
Step Count1	300	200	150	200			
Step Count2	350	250	200	300			
Step Count3	350	250	200	300			
↓							
Step Count16	300	300	200	300			

The step up rate for GUN NO "3" selected by the Gun Select parameter in the activation series 2 is set.

Note: The data applies when 4 guns are used.

11.7.3 Step All Clear

When the Step Up function is used, the Step All Clear input on the TB1 terminal block clears the step conditions of all the guns.

11.7.4 Step Select Clear

Step Select Clear on the TB1 terminal block can be used with an activation switch at the same time to specify the GUN No. and to reset its steps.

How to specify the GUN No.
In A Mode
GUN No. 1 Step Select Clear + Input Signal Common + START SW 1
GUN No. 2 Step Select Clear + Input Signal Common + START SW 2
GUN No. 3 Step Select Clear + Input Signal Common + START SW 3
GUN No. 4 Step Select Clear + Input Signal Common + START SW 4
In B Mode (binary input)
GUN No. 1 Step Select Clear + Input Signal Common + START SW 1
GUN No. 2 Step Select Clear + Input Signal Common + START SW 2
GUN No. 3 Step Select Clear + Input Signal Common + START SW 1 + START SW 2
GUN No. 4 Step Select Clear + Input Signal Common + START SW 3
GUN No. 5 Step Select Clear + Input Signal Common + START SW 1 + START SW 3
GUN No. 6 Step Select Clear + Input Signal Common + START SW 2 + START SW 3
GUN No. 7 Step Select Clear + Input Signal Common + START SW 1 + START SW 2 + START SW3
GUN No. 8 Step Select Clear + Input Signal Common + START SW 4

Specifying a Step select clear

TB1: B15 Step select clear	+	TB1: A12 Input common	+	TB1: Combination of the start SW Combination of the S.SW for Step clear

The inside treatment of step select clear

Selected to step select clear	⇒	Reference to GUN num. at selected to Combination of Start SW	⇒	GUN num. which shows a specified to Combination of the Start SW is looked Up from the welding condition table.

11.7.5 Step Reset

See Section “4.13 Step Reset”.

11.7.6 Step Change

See Section “4.14 Step Change”.

11.8 Linear Up control

11.8.1 Linear Up control

The Linear Up function provides linear interpolation with the next current application during step control.

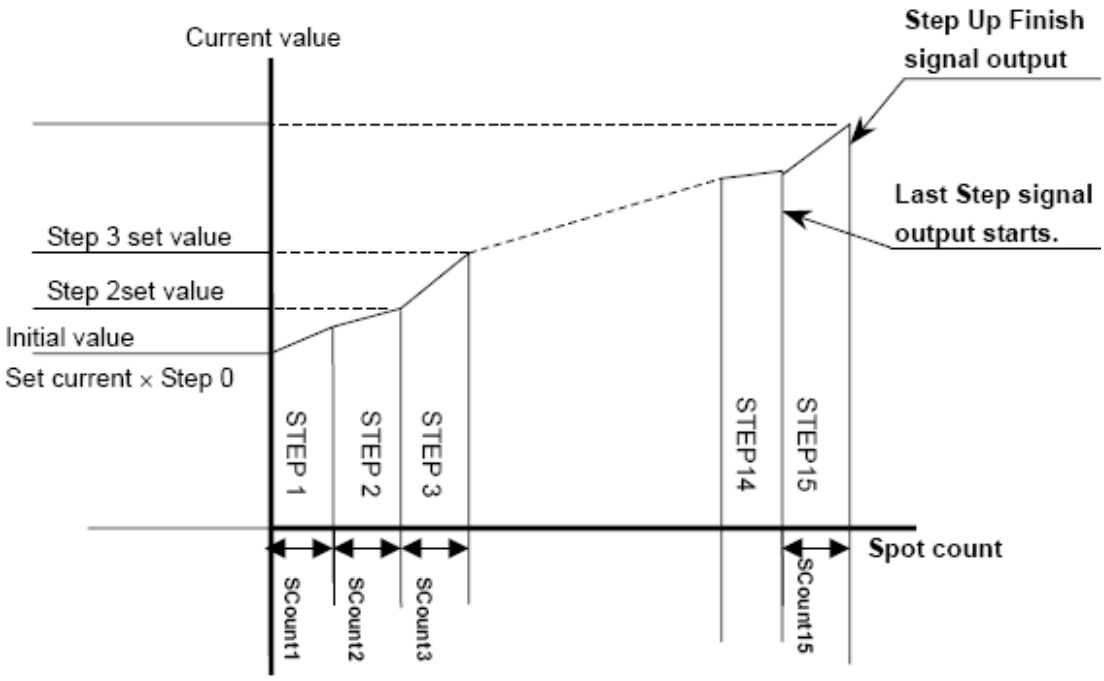

Caution

- When the Linear UP control is selected, the step up order can be raised up to Step 15.
- The up rate should be set for Step 0 when making linear up from Step 1.

11.8.2 Setting procedure for using the linear Up function.

See the setting procedure for using the Step Up function described in Section 11.7.

11.9 Variable Pressure (option)

Variable Pressure (designed for the electro-pneumatic regulator)

11.9.1 Variable Pressure setting

In the Variable Pressure function, the gun welding pressure can be changed by sending the signal to the electro-pneumatic regulator that adjusts the compressed air pressure levels.

Settings for using the Variable Pressure function:

Parameter settings:

- VP Type 0-5V / 0-10V

Welding condition settings:

- MaxV.
- PAjust
- Press T1 to T3
- PressV1 to V3

Typicalsettings :

The Variable Pressure is set in two ways: direct setting with "N" when inputting the data on welding conditions and "%" input with the equipment air pressure taken as 100%.

Direct setting or welding pressure:

1) MaxV setting
   Input the maximum pressure for the installed guns.(See the drawing and other material.)
2) PAjust setting
   Use a provisional pressure efficiency of 100%..
3) Pressure increase time and set pressure value settings.
   Input data according to the welding sequence as well as the set welding pressure.
4) Adjustment <Adjust the PAjust>
   Measure the actual pressure and adjust the error at the specific pressure deeiciency.

% setting of welding pressure:

1) Set the PAjust
   Set a basic pressure efficiency to 100%.
2) Set the pressure increase time
   Input data according to the welding sequence.
3) Set the set pressure value
   Input data in % with the plant air pressure taken as 100%.

CAUTION

1. Please confirm the range of the control voltage of the model used, and set the parameter of the variable pressure function selection. An incorrect setting can damage the unit.
2. If the plant air pressure does not meet the required pressure for the gun, the maximum pressure cannot be attained.

11.9.2 Variable Pressure sequence

Basic sequence of Variable Pressure

PressV1 to 3: Set pressure values V1 to V3 settings.

PressT1 to 3: Pressure increase time T1 to T3 settings.

The set pressure then the Variable Pressure is held at the pressure value V1 to the end of the welding sequence. Even when a welding sequence has reached its end during PressT2 Time, the sequence is given preference and after end of the Hold End signal, V1 is held to the end of the sequence.

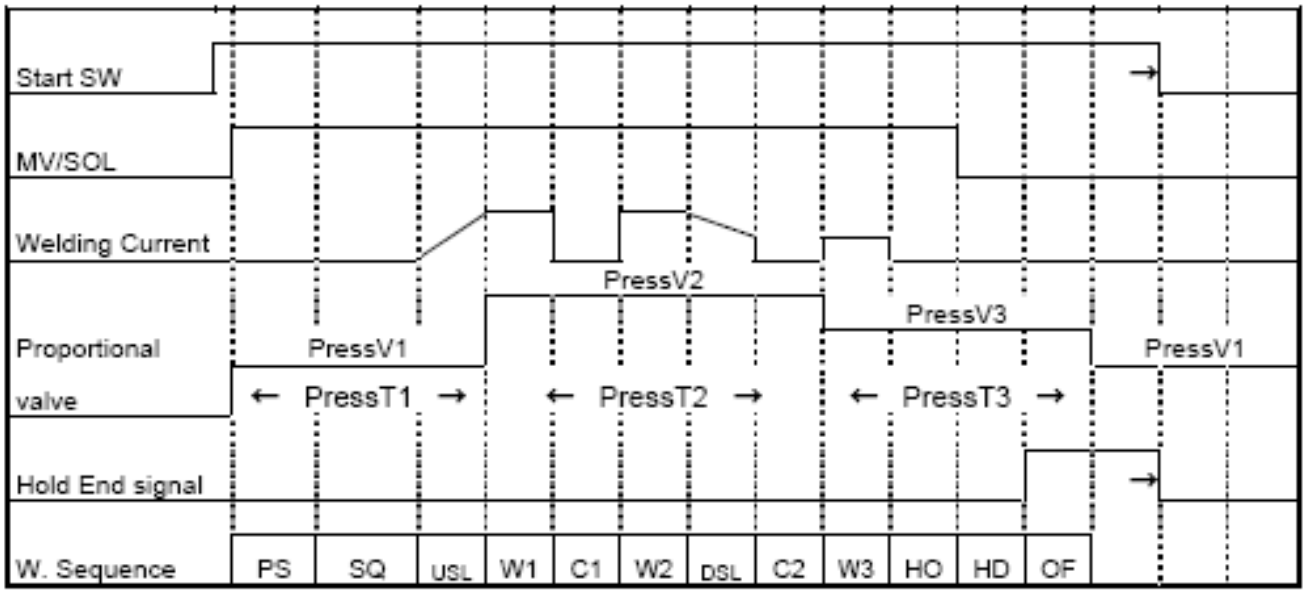

11.10 Pressure Selector

Settings when the Pressure Selector function is used

Parameter: Gun Sel

Set the value “31 or 32” for the parameter “Gun Sel”. The upper digit “3” indicates that the Pressure Selector function is enabled.

Enter the SOL output No. used for Main in the lower digit “1or 2”. If “3 or 4” is entered in the lower digit, the Pressure Selector function is given preference and the setting will not act as SOL3 or 4 output.

Basic sequence of Pressure Selector

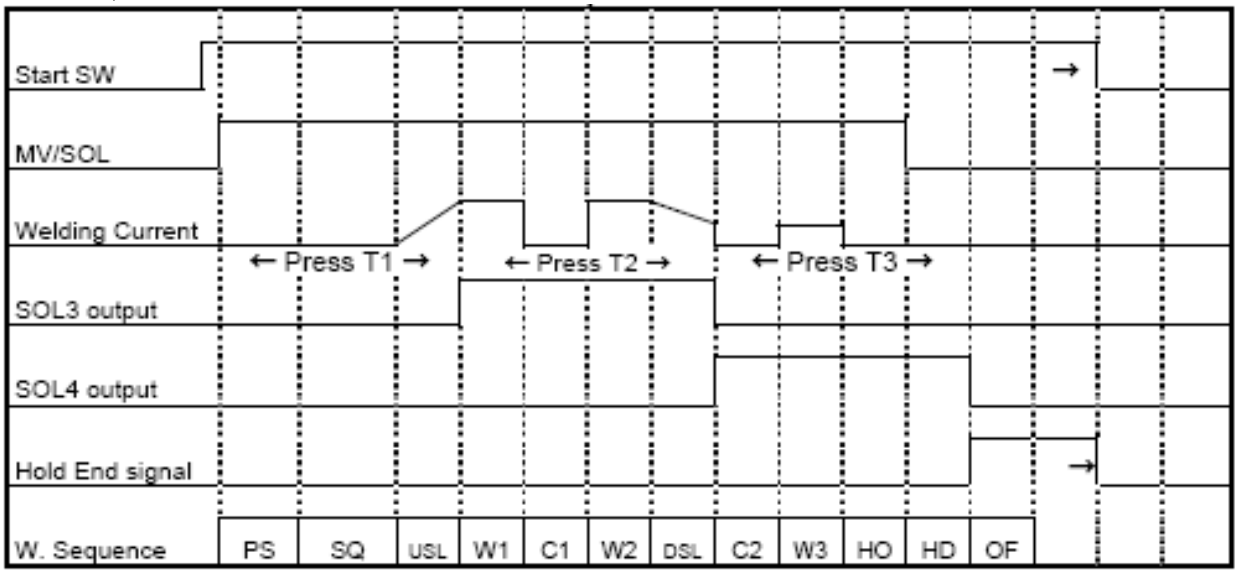

11.11 Weld Interlock

The parameter setting shown in Section 1) allows you to obtain inputs and outputs for interlock from the TB1 terminal block in the main unit. For the inputs and outputs and time chart, refer to Section "2) Weld interlock chart".

1) Setting during use of the Weld Interlock function
   Parameter setting: Gun Selection (Gun Sel)
   Set the value "41-44" for Gun Sel. The upper digit "4" indicates that the Weld Interlock function is enabled. Enter the maximum SOL output No. used for Main in the lower digit. If "3 or 4" is entered in the lower digit, the Pressure Selector function is given preference and the setting will not act as SOL3 or 4 output.
2) Time chart of Weld Interlock
   Description of Weld Interlock inputs and outputs
   Start Acceptance output: TB1 terminal block; Retract SOL Common (B1) – Retract SOL7 (B2)
   Conduction Wait input: TB1 terminal block; Input Signal Common (A7) – Retract START SW 7 (B8)
   Output during conduction: TB1 terminal block; Retract SOL Common (B1) – Retract SOL8 (B3)

Description of Interlock time chart

Start Accept output: START SW input is outputted from the confirmation to the end of hold.
Conduction Wait input: Set this input to OFF to allow conduction. Set this input to OFF to extend the squeeze time.
Output during conduction: Output during conduction. This is outputted from the start of Up Slope to Weld3.
Output during conduction: Output during conduction. This is outputted from the start of Up Slope to Weld3.
WIL: Means the extension time of the squeeze time determined by Weld Interlock.

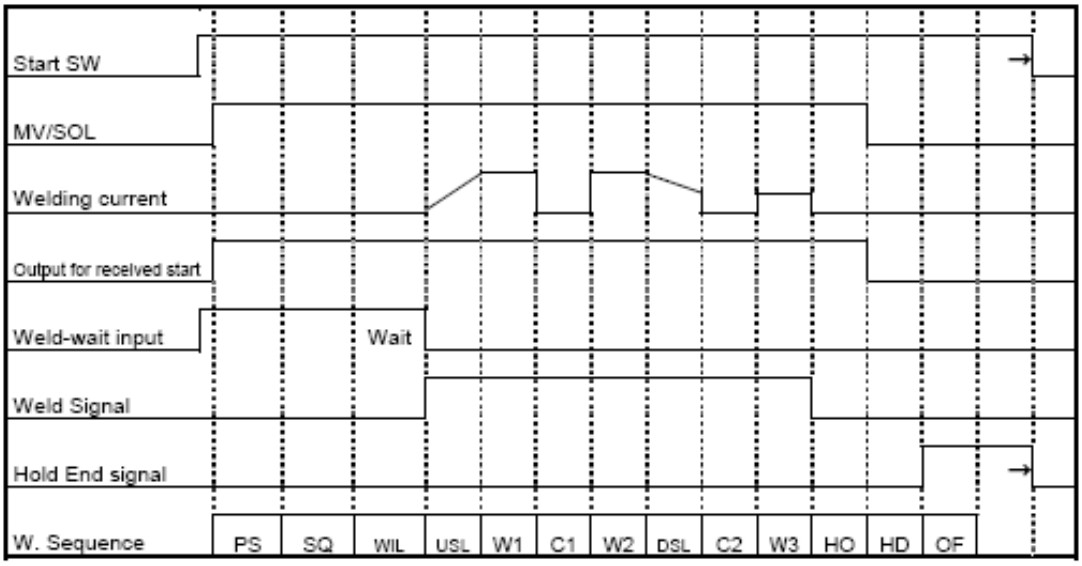

11.12 No Weld/Conti.Press

When data has been set up, use the “No Weld” mode to verify the welding operations.
- No Weld (NOW)
Use this mode when verifying the welding sequence upon completion of installation or when changing the tip. The welding sequence will be controlled according to your settings but no conduction will be provided.
- Conti. Press. (NOW2)
The gun will hold the pressurization state while START SW is set to ON. This mode can be used to check for gun engagement and to measure the welding pressure. However, this mode is enabled when the solenoid valve power is connected to the timer side. No conduction will be provided.

No Weld procedure

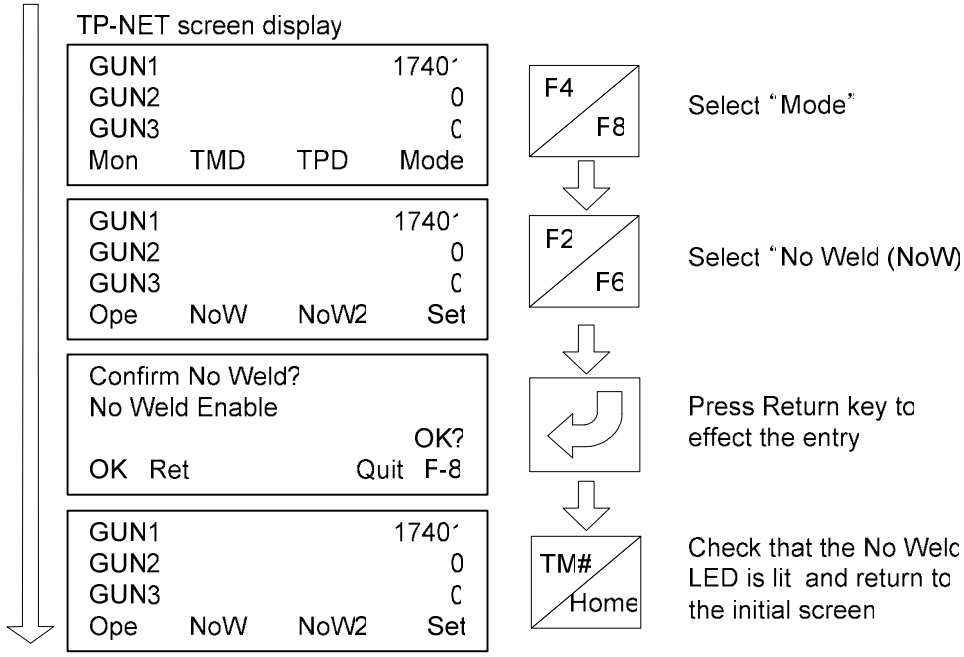

Conti. Press. procedure

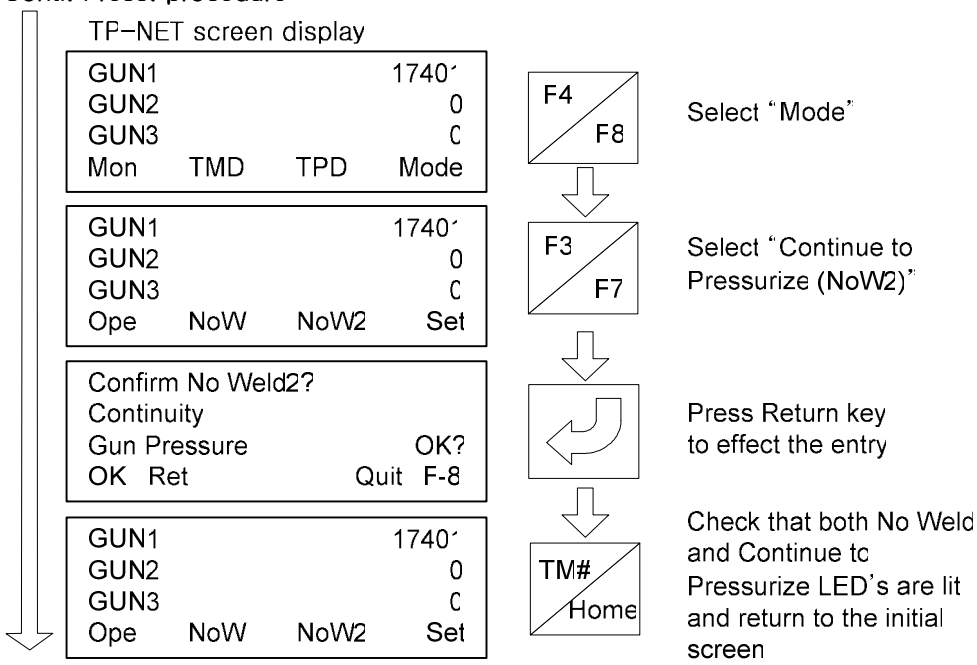

No Weld mode Sequence (Whether an alarm is outputted or not depends on the parameter settings.)

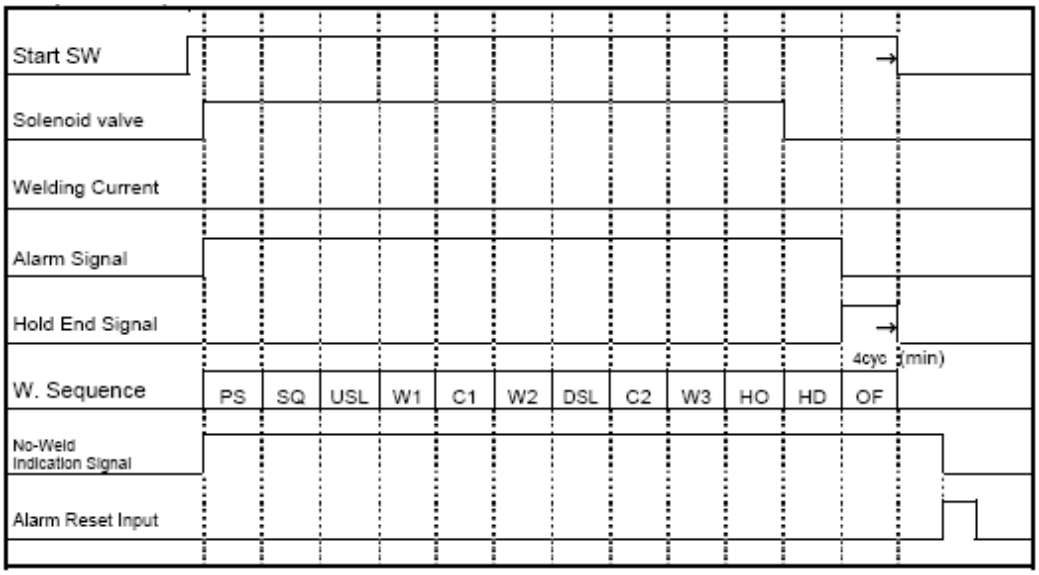

Conti. Press mode Sequence (Whether an alarm is outputted or not depends on the parameter settings)
START SW-Conti. Press during ON hold time.

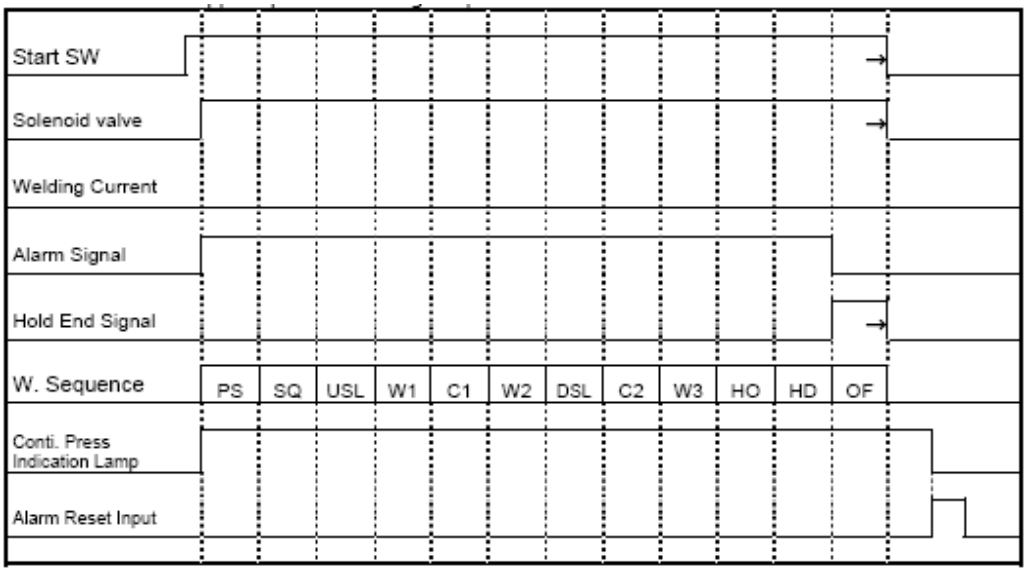

11.13 Device-Net (option)

When DeviceNet is used: with the parameter "Pq Remote I/O" set to ON)

[Input]

D/N Input1 to 5	: 5 N.O. Contacts(Internal: 24VDC, Input current: 20mA)
Step All Clear input	: 1 N.O. Contacts X 1 series(Internal: 24VDC, Input current: 20mA)
Alarm Reset input	: 1 N.O. Contacts X 1 series(Internal: 24VDC, Input current: 20mA)
Weld ON/OFF Switch input	: 1 N.O. Contacts X 1 series(Internal: 24VDC, Input current: 20mA)
Safety Switch input	: 1 N.O. Contacts X 1 series(Internal: 24VDC, Input current: 20mA)
Trans Thermo input	: 1 N.O. Contacts X 1 series(Internal: 24VDC, Input current: 20mA)

[Output]

1-4 D/N Output1 to 4	: 1 N.O. Contacts X 4 series(Internal: 24VDC, Max.current:0.5A)
5-8 D/N Output5 to 8	: 1 N.O. Contacts X 4 series(Internal: 24VDC, Max.current:0.5A)

Note: The outputs and inputs change depending on the parameter settings.
Inputs and outputs on the terminal block with the parameter "Pq Remote I/O" set to ON.
It is assumed that I/O control is made by the DeviceNet or other unit with the parameter setting of "Pq Remote I/O" ON. Therefore, the specifications for inputs and outputs on terminal block are subject to change. See the circuit diagram.
When controlling the welder by means of the DeviceNet and other external I/O, Start inputs, SOL outputs, and different outputs are general-purpose I/O. See the table below.

TB1

TB1	Standard
D/N outputs 1 to 4	Common 24VDC output
D/N outputs 5 to 8	Contact output
D/N inputs 1 to 5	Contact output
Alarm Reset	Calls off an alarm by shorting
Weld ON/OFF	Turns on and off the welding operation from an external unit
Step All Clear	Clears step up data for GUN1 up to GUN8
Transf. Thermo	Connects the thermal relay wire to the welding transformer. Automatically reset. N.C. (Normally Closed)
Safety SW	Which to stop the timer in emergency, etc. N.C (operable when closed)

I/O Information list when the DeviceNet is used

When the DeviceNet is used, the I/O monitor display is also changed as the I/O specifications for TB1 are changed.
= Parameter setting with “Pq Remote I/O” set to ON.
I/O correspondence table
See Section “4.5 I/O Information check” for display positions and meanings.
(Note: Crossbars in the table box represent internal information.)

Display Pos.	Welding sequence information
N10	–
N11	–
N12	–
N13	–
N14	Alarm
N15	Hold End
N16	Step Up Finish
N17	Last Step

Display Pos.	Terminal block TB1 input information
N20	–
N21	–
N22	input 1
N23	input 2
N24	input 5
N25	–
N26	input 3
N27	input 4

Display Pos.	Terminal block TB1 input information
N30	–
N31	–
N32	–
N33	–
N34	–
N35	–
N36	Weld/No Weld
N37	Alarm Reset

Display Pos.	Terminal block TB1 input information
N40	–
N41	–
N42	Step All Clear
N43	–
N44	Trans. Thermo
N45	–
N46	–
N47	–

11.13.1 Cable connection

Connect the DeviceNet cable to the side of the timer.
On the timer side, receptacle type: CM02-8DR5P <Manufacturer: DDK>
Recommended connector type: Shielded micro connector CM02A-8KP5S (02) <Manufacturer: DDK>
Note: DeviceNet cable of 1m is used within the main unit. Therefore, the branch line length from the trunk should be 5m or less

General outline of connection

Use one length of the cable for DeviceNet to connect the timer with PLC for I/O operations.

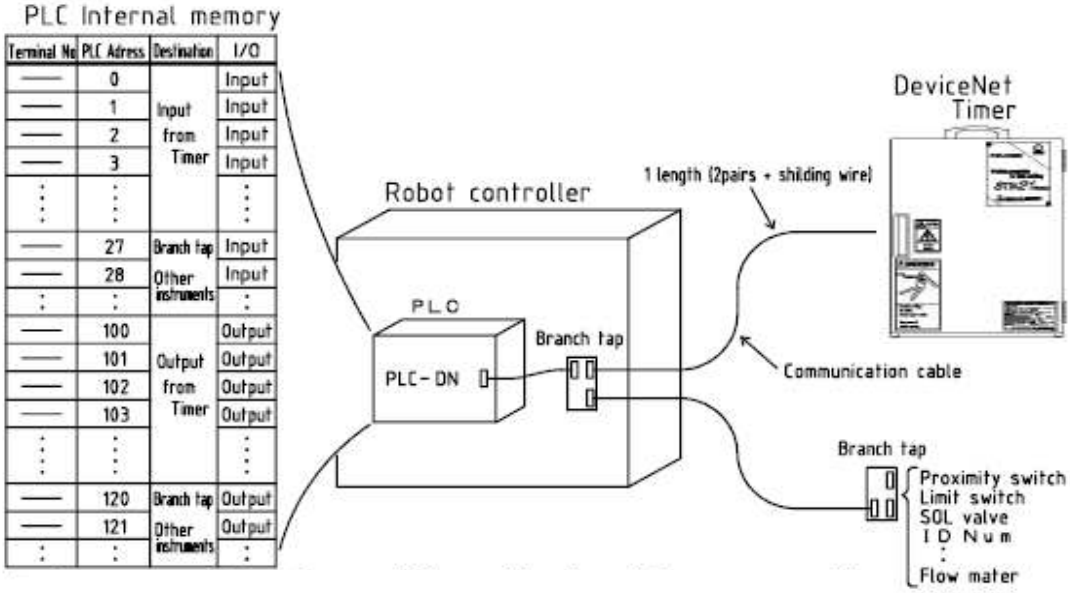

Presence of Terminator (When shipping, it is connected.)

Ex1) When you connect only one timer from PLC of the robot.

Please connect both robots and timer with the terminator. (Two places in total)

Ex2) When there are two or more connected things.

Please connect only both ends on the line with the terminator. (Two places in total)
Please refer to 11.15.5 Names and functions of network elements.
(There is a possibility of causing the communication error when three or more terminators exist on the line.)

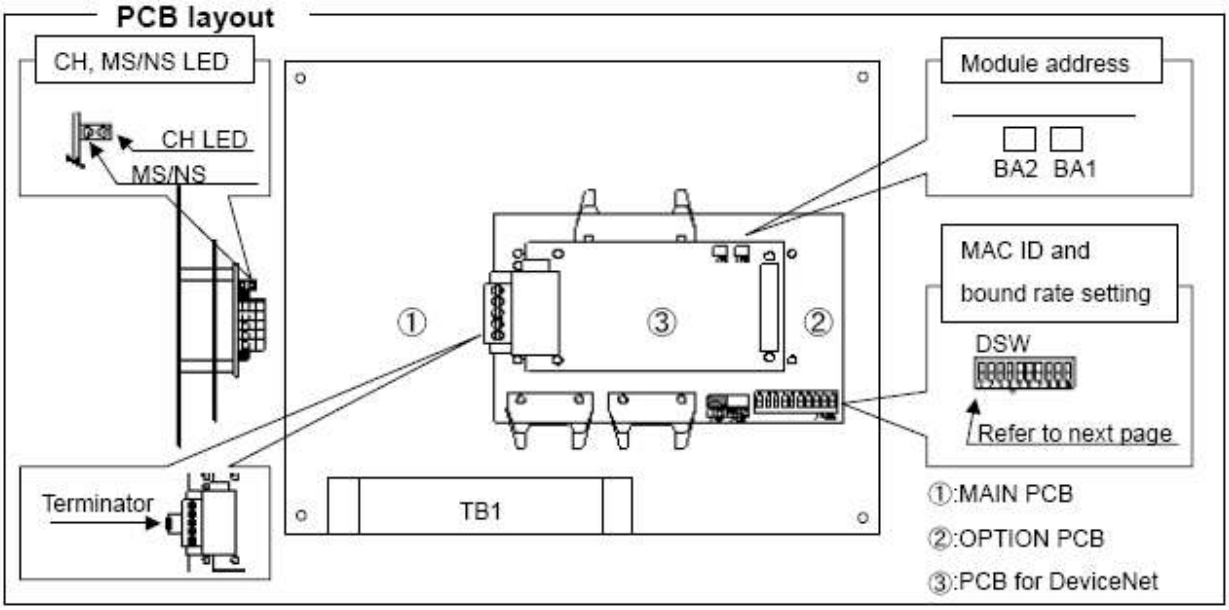

11.13.2 STN21 PCB settings and LED Information

When DeviceNet is connected, check the PCB settings and LED information given below.

(1) Module address setting <Jumper setting>

The module addresses is factory set as shown below. (Not required to be changed.)

BA1	BA2	Mode	Setting
Open	Open	Module address 0	Factory setting
Open	Short	Module address 1	Not used.
Short	Open	Module address 2	
Short	Short	Module address 3	

(2) MAC ID and baud rate settings

Use the DIP SW1 of PC-1088 to set the MAC ID and baud rate.

MAC ID setting : Binary setting (range of 0 to 63)

Baud rate : 125Kbps •••••• SW7-OFF / SW8-OFF

: 250Kbps •••••• SW7-ON / SW8-OFF

: 500Kbps •••••• SW7-OFF / SW8-ON

Standard setting:

DIPSW1	1	2	3	4	5	6	7	8	9	0	
Contents	MAC ID setting (binary)						Baud rate		Fixed to OFF		Standard setting
Factory setting	1	0	0	0	0	0	0	1	0	0	(MACID=1),(500Kbps)

0·····OFF / 1·····ON

(3) CH LED (Common health LED)

CH LED는 indicates the I/O state/mode

CH LED는 is located on the board for DeviceNet. The statuses are given below.

At the start-up, the red lamp lights up 250ma and the green lamp lights up 250ms for confirmation.

LED status	Status
Off	POWER OFF, hardware/software being reset.
Red Flashing	Repairable configuration error (incorrect data written) (Firmware, OEM, personal data error)
Red On	Hardware error, fatal runtime error
Green Flashing	No error. Data exchange interface closed.
Green On	No error. Data exchange interface is active.
Amber (Red/green=Yellow)	Configuration mode

(4) MS/NS LED (Module/network status LED)

MS/NS LED indicates the device and communication statuses.

MS/NS LED is located on the board for DeviceNet. The statuses are given below.

At start-up, the red lamp lights up 250ms and the green lamp lights up 250ms for confirmation.

LED status	Status
Off	Network interface Offline/POWER Off
Red Flashing	I/O connection timeout or other recoverable error
Red On	Unrecoverable error has occurred. Communication stopped due to frequent data error or duplicate node address.
Green Flashing	Device is normally operated and online but the connection with other node is not established.
Green On	Network established.
Amber (Red/green=Yellow)	Acknowledging a request for communication error in the communication error status.

11.13.3 DeviceNet I/O allocation table

Timer output information via DeviceNet (Input Information)

PLC address	Name (Description)	Remark	PLC address	Name (Description)	Remark
***00	Hold End		***30	Pressure32	Pressure 0 to 8160N (Binary) Every 32N 16 rounded down 17 rounded up
1	Start up underway		1	Pressure64	
2	Step Up No1	Step 0 to 15 (Binary)	2	Pressure128	
3	Step Up No2		3	Pressure256	
4	Step Up No4		4	Pressure512	
5	Step Up No8		5	Pressure1024	
6	Step Up Finish Notice		6	Pressure2048	
7	Step Up Finish		7	Pressure4096	
***10	Alarm Code1	Alarm Code 0 to 31 (Binary)	***40	Timer Alarm Notice	
1	Alarm Code2		1	Timer Normal	ON in normal mode
2	Alarm Code4		2	General-purpose input1	General-purpose Input from an external unit to the timer
3	Alarm Code8		3	General-purpose input2	
4	Alarm Code16		4	General-purpose input3	
5	Monitor Output Code1	Monitor Code 0 to 7 (Binary)	5	General-purpose input4	
6	Monitor Output Code2		6	General-purpose input5	
7	Monitor Output Code4		7	Monitor Output Code8	
***20	Monitor Data1	Monitor Information 0 to 255 (Binary)			
1	Monitor Data2				
2	Monitor Data4				
3	Monitor Data8				
4	Monitor Data16				
5	Monitor Data32				
6	Monitor Data64				
7	Monitor Data128				

↑ The number Allocation at ** depends on the set address of the PLC.

Timer input information via DeviceNet (Output command from the PLC)

PLC address	Name (Description)	Remark	PLC address	Name (Description)	Remark
***50	Timer Series1	1 to 15 Condition (Binary)	***70	General-purpose output1	General-purpose Output from the Timer to an external Unit- Common 24VDC
1	Timer Series2		1	General-purpose output2	
2	Timer Series4		2	General-purpose output3	
3	Timer Series8		3	General-purpose output4	General-purpose output from the Timer to an external unit
4	Group NO.1	0 to 15 Group (Binary)	4	General-purpose output5	
5	Group NO.2		5	General-purpose output6	
6	Group NO.4		6	General-purpose output7	
7	Group NO.8		7	General-purpose output8	
***60	Timer Start Up				
1	Weld Mode	ON:WELD			
2	Alarm Reset				
3	Step Up Reset				
4	Step Change				
5	Step Up All Reset				
6	Weld Wait				
7	Monitor Change				

↑ The number allocation at ** depends on the set address of PLC.

Note1: See the next page for further details of D/N Alarm Signal Code.
Note2: See the next page for further details of D/N Monitor Output Code.
Note3: When an alarm of the caution level has occurred… ON
Note4: The Monitor Output Code should be used in combination with **15, 16 or 17.

DeviceNet alarm code correspondence table

When an alarm has occurred

Alarm Code	Alarm	Alarm level	Timer Normal signal	Timer Alarm Notice signal	Remarks
0	Normal (normal mode)	Normal	O	X	No alarm
1	Overcurrent/SCR short	Warning	X	X	
2	SCR Overheat	Warning	X	X	
3	Transformer Overheat	Warning	X	X	
4	Frequency POWER Error	Warning	X	X	
5	Parameter Error	Warning	X	X	
6	Unit Operation Error	Warning	X	X	
7	Set Data Error	Warning	X	X	
8	Trans Diode Error	Warning	X	X	
11	No Current	Cautionary	X/(O)	X/(O)	Note1
12	Current Low	Cautionary	X/(O)	X/(O)	Note1
14	Current High	Cautionary	X/(O)	X/(O)	Note1
16	Peak Current High	Cautionary	X/(O)	X/(O)	Note1
20	Current Flow Ratio High	Notice	O	O	
21	Current Unbalance	Notice	O	O	
22	W1,2,3 cycle num. few	Notice	O	O	
23	Communication Error (for condition setting)	Notice	O	O	
24	No Weld Error	Cautionary	X/(O)	X	Note2
25	Conti. Press. Setting Error	Cautionary	X/(O)	X	Note2

Signal output Information: o ··· ON (High) x ··· OFF (LOW)

Note1: Setting the parameter “P7 AIM Mode” to 3 sets the alarm level to Notice.
The standard setting is x.

Note2: Setting the parameter “Pi TestW ALM” to OFF sets the alarm signal to the Time.
Normal signal “o”.

Monitor output code & monitor data correspondence table

Monitor Output Codes show the contents of the codes outputted to Monitor Data1 to 128 of the DeviceNet timer output information and they are set at the same time.
“Monitor Change” in the timer input information.
When Monitor Output Code is “7”, the code is then circulated to “0” and indicated.

Monitor Output Code	Monitor name	Indication range	Indication unit	Remarks
0	Average current value	0 to 25.5kA	0.1kA	Note3
1	Heat1 value	0 to 25.5kA	0.1kA	Note3
2	Heat2 value	0 to 25.5kA	0.1kA	Note3
3	Heat3 value	0 to 25.5kA	0.1kA	Note3
4	Peak Current Value	0 to 25.5kA	0.1kA	Note3
6	Current Flow Ratio	0 to 100%	1%	
7	Weld Time	0 to 255cyc	1cyc	Note3
8	Start Series	01 to FF	01	

Note3: For a value exceeding the Indication range, its maximum value is indicated.

Note4: Monitor Output Codes 9 to 15 are reserved and skipped in processing.

Description of the terms of inputs and outputs handled by DeviceNet.
The following table describes the terms in the DeviceaNet I/O allocation table.

Term			Description
Timer output Information	Hold End	Output timing	After Hold Time/Hold Delay process time.
		Operation	Output upon normal end or the welding operation. (As per the parameter set conditions)
	Start Up underway	Output timing	Response to “Timer Start Up” input in the timer input information.
		Operation	Output while “Timer Start Up” in the timer input information is being inputted.
	Step Up No.1 to 8	Output timing	Response when “Timer Series” + “Group No” are inputted.
		Operation	Binary output of step up order information selected by the Gun No. (=Step Up Series) selected based on the above input conditions.
	Step Up Finish Notice	Output timing	When “Timer Series” + “Group No” are inputted and the Step up order reaches the last.
		Operation	Output when the Step order selected by the Gun No. (=Step Up Series) selected based on the above input condition reaches the last.
	Step Up Finish	Output timing	When “Timer Series” + “Group No” are inputted and the Step up order reaches completion.
		Operation	Output when the Step up order selected by the Gun No. (=Step Up Series) selected based on the above input condition reaches completion.
	Alarm Code 1 to 16	Output timing	When one of the alarms in the Alarm Code table is detected.
		Operation	Binary output of Alarm Code No.
	Monitor Output Code 1 to 8	Output timing	Update when “Monitor Change” input in timer input information is changed (at the rising edge).
		Operation	Binary output of the code No. corresponding to “Monitor Data” in the timer output Information (see the Monitor items).
	Monitor Data 1 to 128	Output timing	When “Monitor Change” input in the timer input information is changed (at the rising edge) or data on welding results is updated.
		Operation	Binary output of information on the welding results corresponding to “Monitor output Code” in the timer output information.
	Pressure 32 to 4096	Output timing	Response when “Timer Series” + “Group No.” are inputted.

		Operation	Binary output of information on the welding results corresponding to “Monitor output Code” in the timer output Information.
	Timer Alarm Notice	Output timing	When the Warning and Notice levels of alarms have occurred (See Alarm Codes).
		Operation	Output when the Warning and Notice levels of alarms have occurred. However, the Warning level can be selected for output using the parameter.
	Timer Normal	Output timing	When one of the alarms in the Alarm Code table is detected.
		Operation	Always ON in normal mode as shown in the Alarm Code table. OFF upon occurrence of alarm.
	General-purpose Input 1 to 5	Output timing	Response to Genera-purpose inputs 1 to 5 to the terminal block TB1 in the timer main unit.
		Operation	Information is given to PLC upon input to General-purpose inputs 1 to 5 on the terminal block TB1 in the timer main unit.
Timer input Information	Timer Series 1 to 8	Input condition	Batch transfer and processing of MOV and other instructions to prevent variations from being caused by PLC instructions.
		Operation	Selection of the intended timer series by combining “Timer Series” and “Group No.” Then input of “Timer Activation” signal causes the welding sequence to start. Without the Timer Activation signal input, the corresponding “Step Up Information” and “Pressure Information” will be reflected to timer output information.
	Group No.1 to 8	Input condition	Batch transfer and processing of MOV and other instructions to prevent variations from being caused by PLC instructions.
		Operation	Selection of the intended timer series by combining “Timer Series” and “Group No.” Then input of ”Timer Activation” signal causes the welding sequence to start. Without the Timer Activation signal input, the corresponding “Step Up Information” and “pressure Information” will be reflected to timer output information.
	Timer Start Up	Input condition	Input with timing after “Timer Series” + “Group No.” in the timer input information are selected.
		Operation	This signal causes the specified welding sequence to start.
	Weld Mode	Input condition	None (except for during conduction).
		Operation	Input of Conduction On allows conduction.
	Alarm Reset	Input condition	When an alarm has occurred.
		Operation	When an alarm has occurred, input of this signal clears the alarm. If the cause of alarm persists (welding transformer overheat, etc.), the alarm cannot be reset unless the cause is removed.
	Step Up Reset	Input condition	Input after “Timer Series” + “Group No.” are selected.
		Operation	This signal clears the Step Sequence selected by the Gun No. (=Step Up Series) selected based on the above input conditions. The Step order to be cleared depends on the value preset for the “Step Back” welding setting condition.

	Step Change	Input condition	Input after “Timer Series” + “Group No.” are selected.
		Operation	This signal steps up by one order the Step Series selected by the gun No. (=Step Up Series) selected based on the above input conditions, At the last step or upon completion, this signal causes a return to the Step order 1.
	Step Up All Reset	Input condition	None
		Operation	This signal resets the Step Up information on all the Step Series and sets the Step order to 1.
	Monitor Change	Input condition	None (Acceptance at the rising edge).
		Operation	Stepping “Monitor Output Code” in the timer output information.
	General-purpose Output 1 to 8	Input condition	None.
		Operation	Setting the general-purpose output 1 to 8 from PLC allows the corresponding general-purpose output terminals to respond and change accordingly.

11.13.4 DeviceNet related special sequence

(1) Operation timing when Trans Diode Error is detected

The Trans Diode Error Detection sequence is followed by use of Start FF (Group F, Start Series F).
See Section 11.5 Trans Diode Short of the special functions for further details.

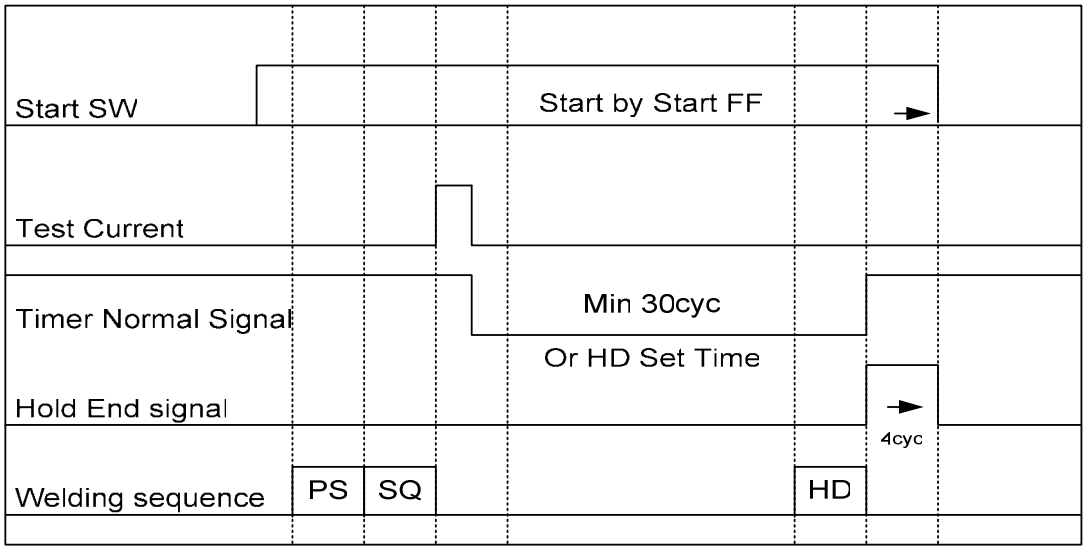

(2) Operation timing when Current Error is detected

1. Parameter settings:
   - HoldA Dly ····· ON
   - Hold Out ····· ON
   - AIM Mode ····· 0
   - Alarm Out ····· OFF(Normal Close)

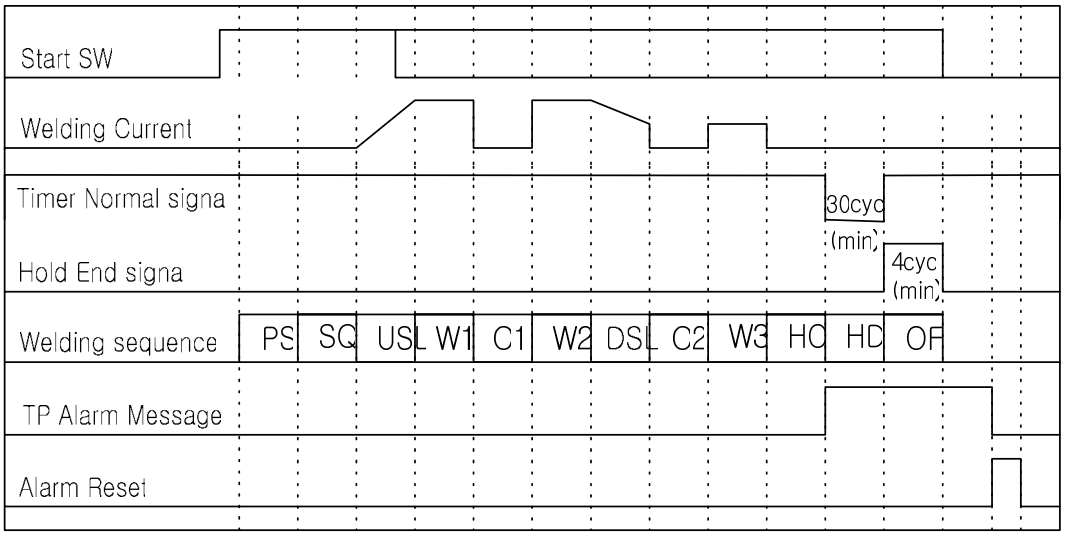

Hold End signal: Minimum 4cyc or OFF Time or start-up hold time end.

11.13.5 Names and functions of network elements

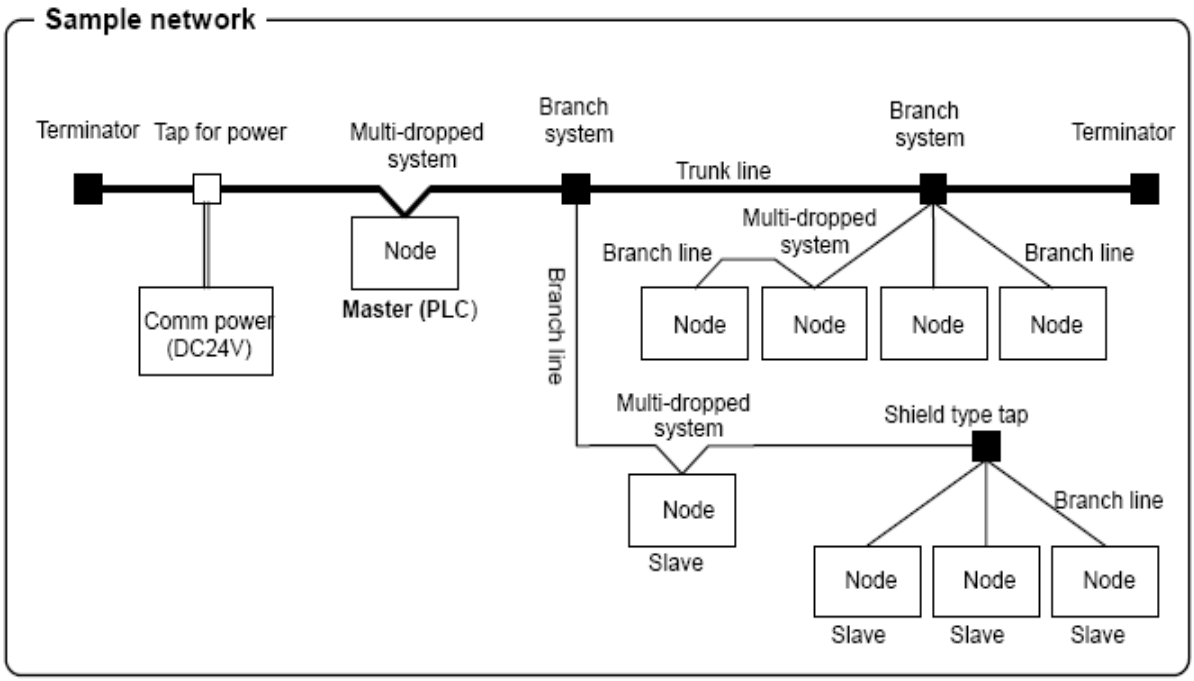

Name	Description
Node	Nodes include master and slaves. Master: Integrates external I/O from slaves. Slave: Connects external I/O. There are no requirements for locations of the master and the slave. They may be located in any of the above nodes.
Trunk line	Cable having its ends attached with a termination resistance. • Usually, a cable that connects the two points furthest away from each other is called a trunk. • 5-wire cable (2 signal wires, 2 power wires and 1 shielding wire) is used. • The trunk length does not necessarily agree with the maximum network length.
Branch	Cable branching from the trunk. • Lines can be branched from a branch line. • 5-wire cable (2 signal wires, 2 power wires and 1 shielding wires) is used.
Connection method	Taps are used to connect nodes. Open and shielded taps are available. Shield type: A micro connector or the like is used to connect a node. A branch tap is used to branch lines. Open type: This type tap connects nodes to a trunk or branch directly. A multi-port tap is used to branch lines. Open and shield types of taps can be mixed with each other.
Terminator	Both ends of a trunk are attached with a terminating resistance. This resistance is required to reduce signal reflections and stabilize communications.
Communication power	It is required to supply the communication power to the communication connector of each node using a 5-wire cable. The communication power should be supplied by its dedicated power supply which should not be used for other purposes.

11.13.6 Communication specifications

Typical PLC specifications

Item	Specification			
Inputs and outputs	Input (TM → PLC) 5 bytes / Output (PLC → TM) 3 bytes			
Baud rate	125 k bit/s, 250 k bit/s, 500 k bit/s			
Communication Distance (Maximum length)	Baud rate	125 kbit/s	250 kbit/s	500 kbit/s
	Trunk length using a thick cable	500m	250m	100m
	Trunk length using a thin cable	100m	100m	100m
	Maximum length of branch line	6m	6m	6m
	Total length of branch lice	156m	78m	39m
Communication service	Poling I/O function, Explicit Message function, Heatbeat function			
Communication media	Dedicated cable (5-wire: 2 signal wires, 2 power wires and 1 shielding wire Thick cable for trunk Thin cable for trunk/branch line			

11.13.7 Connection system

The connection system for nodes (master and slaves) includes multi-point and multi-drop systems.

(1) T-branch system

Up to 3 branch lines can be branched from a trunk or branch line.

A branch tap is used for this purpose.

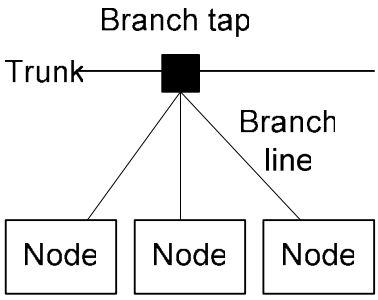

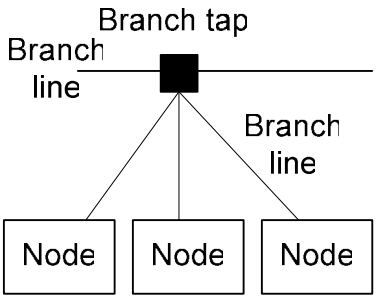

(2) Multi-drop system

The node is directly connected to a trunk or branch line.

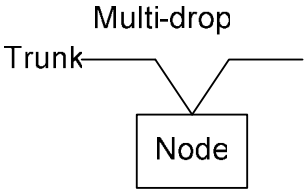

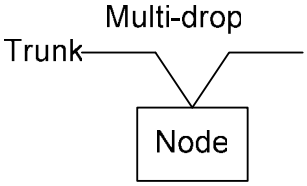

11.13.8 Cable length

(1) Maximum length of network

The maximum length of network represents the following, whichever is the longer.

① Distance between terminators

② Distance between the most distant two nodes

Sample diagram of maximum length of network

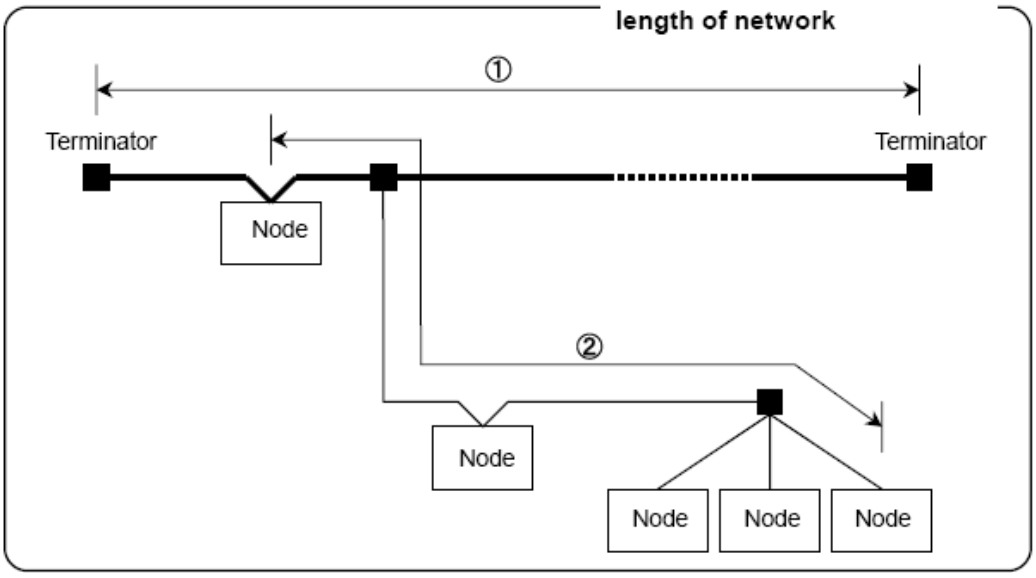

The maximum length of network varies with the cable type as well as with the baud rate.

Baud rate	Maximum length of network		Branch line length	Total length of Branch lines
	Thick cable	Thin cable		
500k bit/s	100m or less	100m or less	6m or less	39m or less
250k bit/s	250m or less			78m or less
125k bit/s	500m or less			156m or less

When thick and thin cables are mixed with each other,the following conditions need be satisfied.

Baud rate	Maximum length of network
500k bit/s	A+B ≤ 100m
250k bit/s	A+2.5*B ≤ 250m
125k bit/s	A+5*B ≤ 500m

A: Length of thick cable
B: Length of thin cable

(2) Branch line length

The maximum length of branch line is 6m. Lines can be branched from a branch line.
However, the distance from the point branching from the trunk to the end of the branch line should be 6m or less.

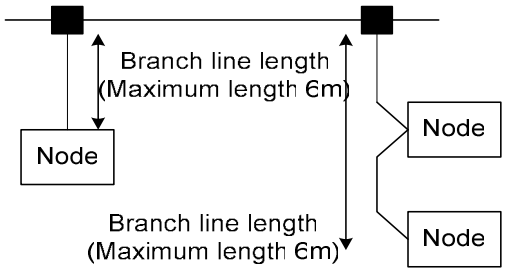
Branch line length
(Maximum length 6m)
Node
Node
Branch line length
(Maximum length 6m)
Node

11.13.9 Power supply

Connect the communication power to the trunk.

The 2 out of 5 wire cables used in trunk/branch line are for communication power (24VDC).

The communication power should not be used for other purposes.

Connection from the trunk to the communication power supply is established in the following ways:

For connecting one power supply to one network:

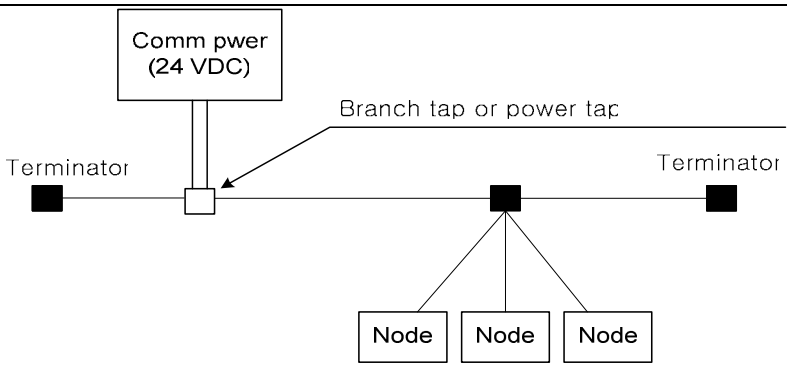

For connecting more than one power supply to one network:

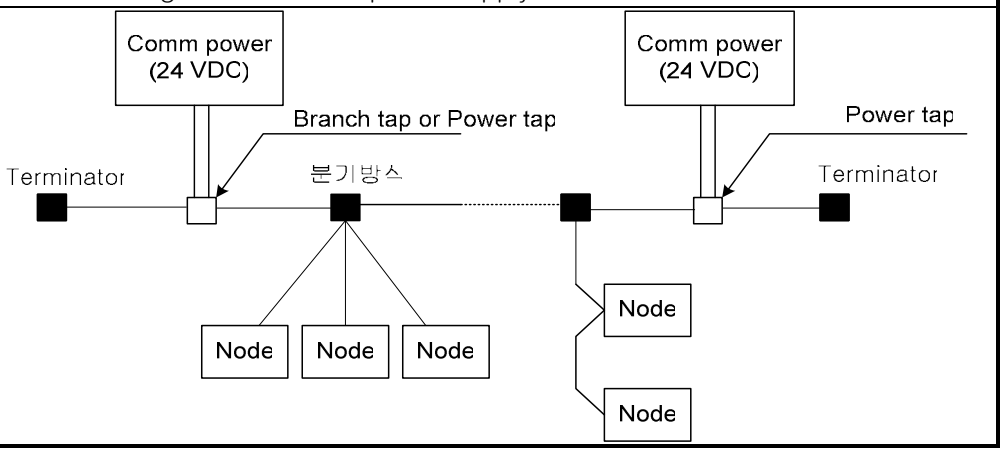

Structure of the power tap

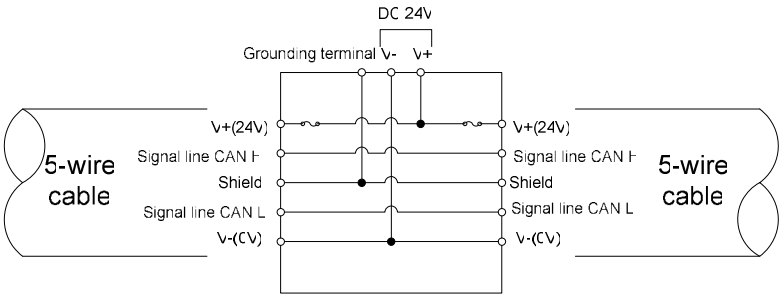

11.13.10 Connection related equipment

In addition to master and slaves, equipment used in DeviceNet includes cables, branch taps, power taps, communication connectors, terminating connectors and communication power supplies. The models (manufacturers) of such parts available are listed below.

(1) Cables

5-wire cables that include thick and thin cables.

Number of wires: 5 (2 signal wires, 2 power wires and 1 shielding wire)

Model	Thickness	Length	Outside diameter (mm)	Application	Manufacturer
1485C-P1-A50	Thick cable	50m	1.6~12.1	Trunk	Allen-Bradley
1485C-P1-C150	Thin cable	150m	6.9	Trunk and branch line	
형 DCA2-5C10	Thick cable	100m	1.6~12.1	Trunk	OMRON
형 DCA1-5C10	Thin cable	100m	6.9	Trunk and branch line	

(2) Branch taps

Can branch to 1 or 3 lines.

Model	Number of connectors	Remarks	Manufacturer
Type DCN-1C	3 (Can branch one branch line)	With 3 connectors Terminating resistance attachable	OMRON
Type DCN-3C	5 (Can branch one branch line)	With 5 connectors Terminating resistance attachable	

(3) Power tap

Can be used to provide communication power via the cable (5-wire) when more than one Communication power supply is connected to one network.

Model	Specification	Manufacturer
1485T-P2T5-T5	Power With current back-flow prevention function. With grounding terminal.	Allen-Bradley

- Can be used to connect one communication power to one network. In this case, a branch tap can also be used in addition to this power tap.
- Can be used to prevent current back-flow to power supply due to potential difference when the power supply is to connected to one network.

(4) Communication connector

Model	Remarks	Manufacturer
MSTB2.5/5-ST-5.08AU	For node connection No connector fixing screw	Phoenix Contact
MSTB2.5/ 5-STF-5.08AU	For node connection With connector fixing screw	
형 XW4B-05C1-H1-D	For branch tap connection For node connection No connector fixing screw	OMRON

(5) Terminating resistance

Model	Remarks	Manufacturer
Type DRS1-T	Terminal block type terminating resistance (121Ω)	OMRON
--------	Terminating resistance attached with branch tap (121Ω)	

(6) Communication power

- The communication power must have an output voltage of 24 VDC±1% and have AC input and DC output insulated. In addition, the selected power supply should have extra margin of power

11.13.11 Typical PLC setup

Typical setup of the PLC main unit

Model: JW-20DN

Manufacturer: SHARP

Setup: Make the following settings ① to ④. Then pressing the SCAN switch automatically allocates the Mac ID of each of the slaves connected to the network.

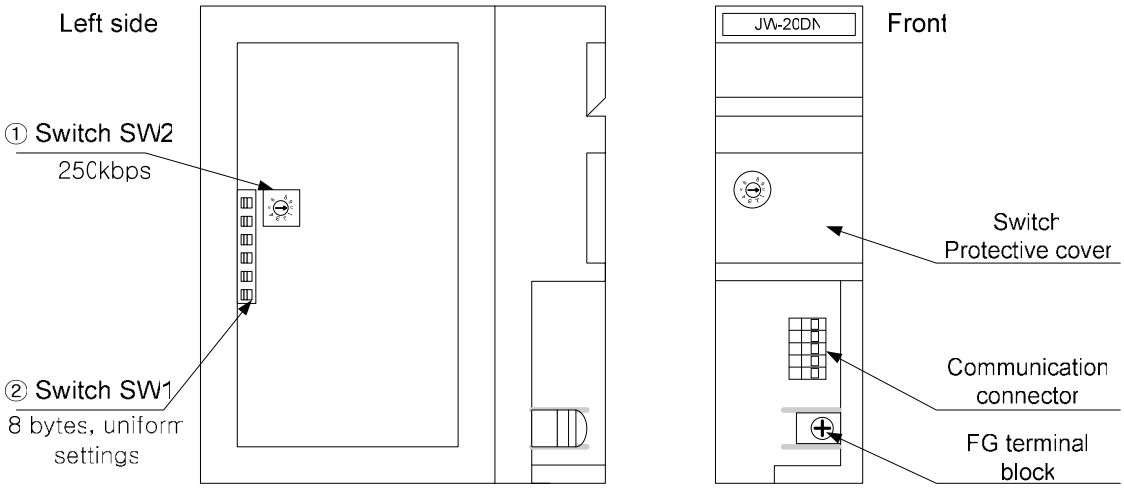

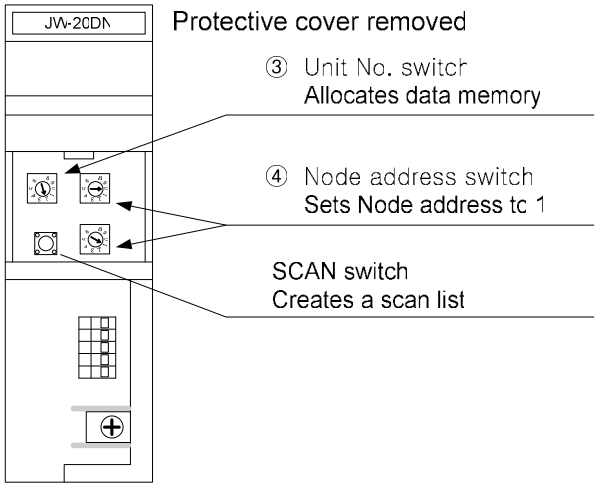

11.13.12 Typical PLC program

The following is a typical program for the timer when JW-20DN is used.
Example of condition: JW20H (PLC main unit), Unit No.1 is selected.

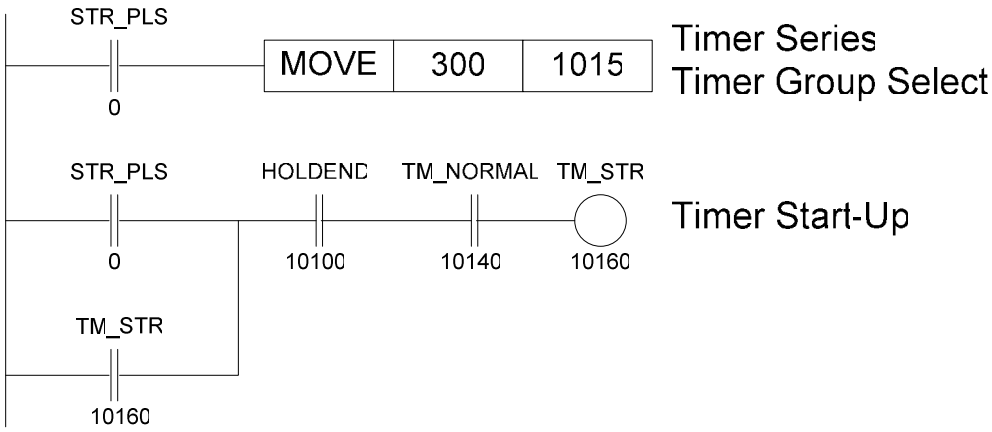

11.14 PLURALITY OF UNIT

11.14.1 Connection of Plurality of Units

Welding conditions can be referred to and preset through TP-Net once the timer is connected to this model using the PJC cable. Set the appropriate parameter number on each timer. When calling the specific timer, select the number preset on it.

Timer connection: Max.31units
Length of Total PJC cable: 500m or less
(In case of PJC-**M: OBARA)

11.14.2 Installation of Plurality of Units

Procedure:
(1) Install the units referring to the 2 Installation
(2) Referring to the illustrations given above, connect the timers using the PJC cables.
(3) The timer to be connected last must be terminated with resistors. Change the setting on the jumper located on the optional board to RD11(SET).

Termination with Resistors

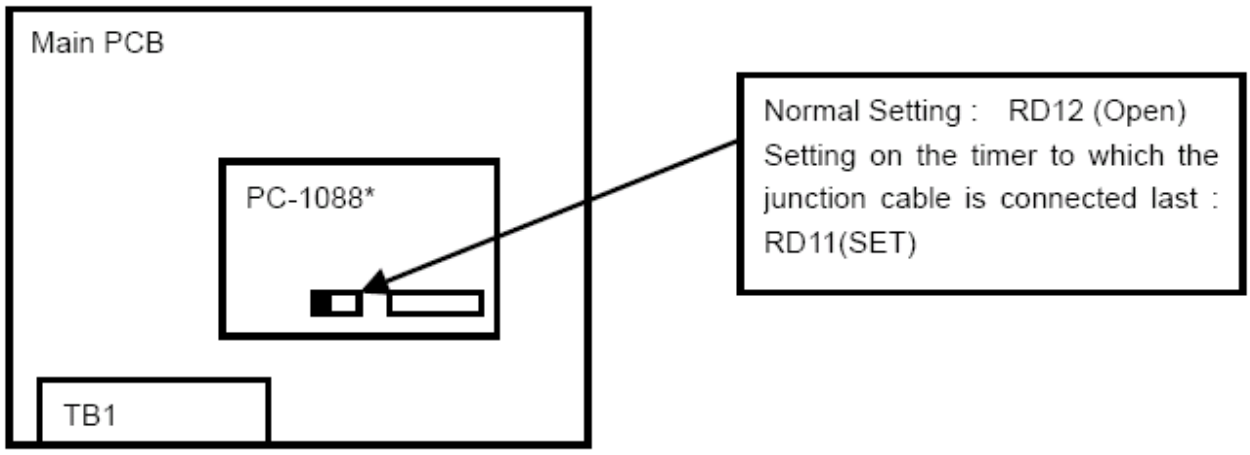

11.14.3 TP-Net Operation for Installation of Plurality of Units

When installing a plurality of units, the timer number must be set using the parameter data.
The timer number may be any of those ranging from 0 to 99. However, it the same number is Selected for two timers connected together, either of them cannot be called up.
Please referring to the “4.TP”.

When the timer number can be set to all timers, the timer number is selected and welding condition is input.
Please refer to “4.6 TP initial operation of the TP” for the method of selecting the timer number.

11.14.4 Troubleshooting (When Plurality of Units Are Connected)

The timer number does not appear		
Problem	Probable cause	Remedial action
Certain timer numbers do not appear	Poor connection between the timer and the cable..	Check the PJC cable for connection.
	There are timer whose selected parameter-preset numbers under “TIMER No” are identical.	Change the parameter-preset numbers under “TIMER No”.
No operation proceeds from the initial screen	The timer in use is not of the type that suits the installation of a plurality of a plurality of units.	Check the nameplate of the timer. It must be of the STN21-G* type

When there are Identical Preset Timer Numbers
When there are two timers whose selected numbers are identical are connected with the cable,
Either of them cannot be referred to with TP-Net. These numbers must be changed by re-setting the parameters.
Number re-setting procedure:
(1) Disconnect the PJC cable that is connected to the timer whose preset number must be changed.
(2) Using the PN/C cable, connect TP-Net to the Timer.
(3) Change the parameter-preset “Pp Timer No” to a new number.
(4) Re-connect the PJC cable.

Wiring for Plurality of Units

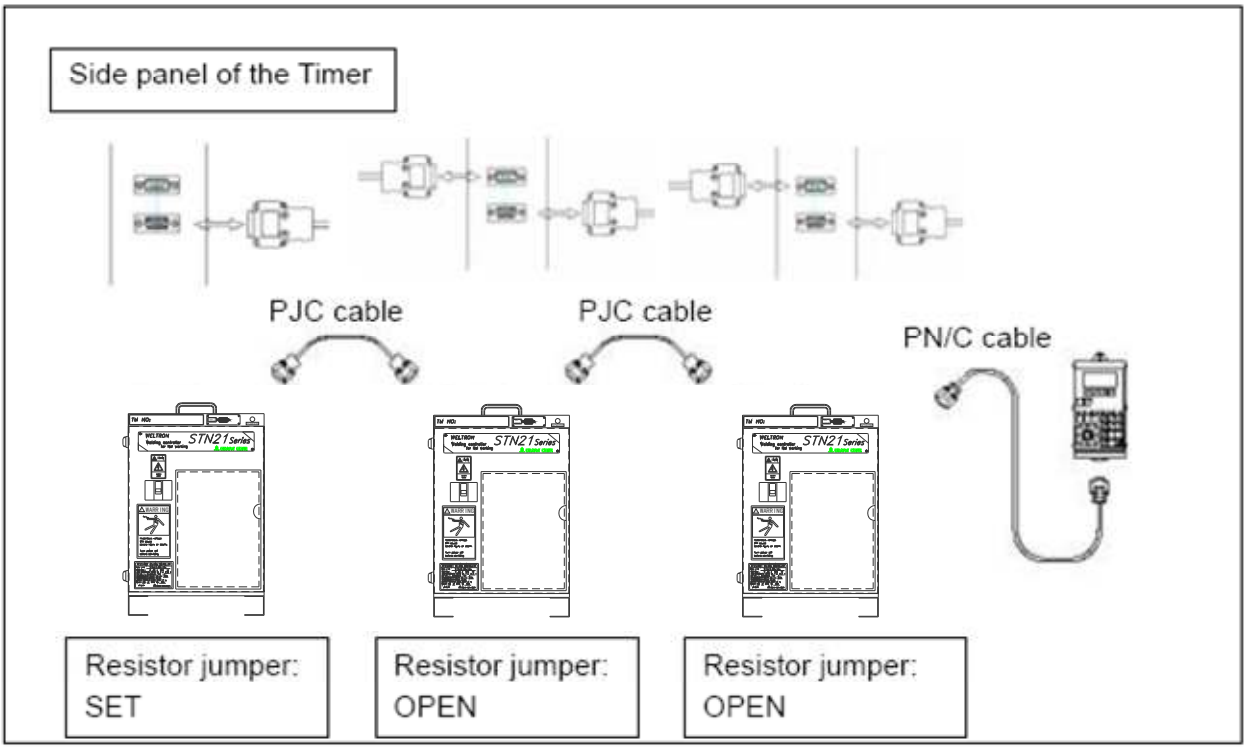
Side panel of the Timer
PJC cable
PJC cable
PN/C cable
Resistor jumper:
SET
Resistor jumper:
OPEN
Resistor jumper:
OPEN

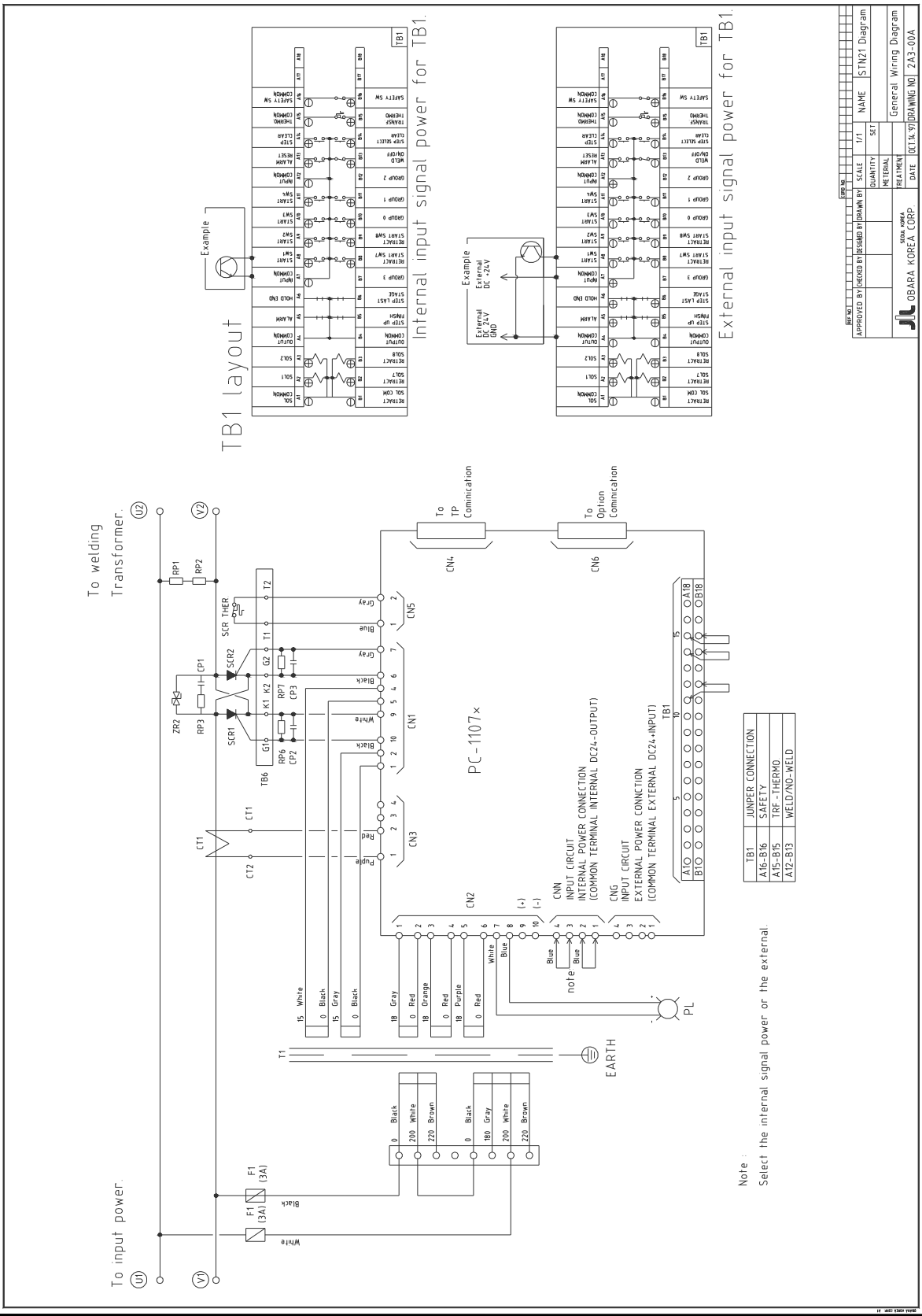
TB1 layout
Internal input signal power for TB1.
External input signal power for TB1.
Example
External DC +24V
External DC 24V GND
To welding Transformer.
To input power.
To TP Cominication
To Option Cominication
PC-1107×
CN1
CN2
CN3
CN4
CN5
CN6
CNN INPUT CIRCUIT INTERNAL POWER CONNECTION (COMMON TERMINAL INTERNAL DC24-OUTPUT)
CNG INPUT CIRCUIT EXTERNAL POWER CONNCTION (COMMON TERMINAL EXTERNAL DC24+INPUT)
TB1 JUNPER CONNECTION
A16-B16 SAFETY
A15-B15 TRF-THERMO
A12-B13 WELD/NO-WELD
EARTH
PL
Note :
Select the internal signal power or the external.
OBARA KOREA CORP.
General Wiring Diagram
STN21 Diagram
2A3-00A

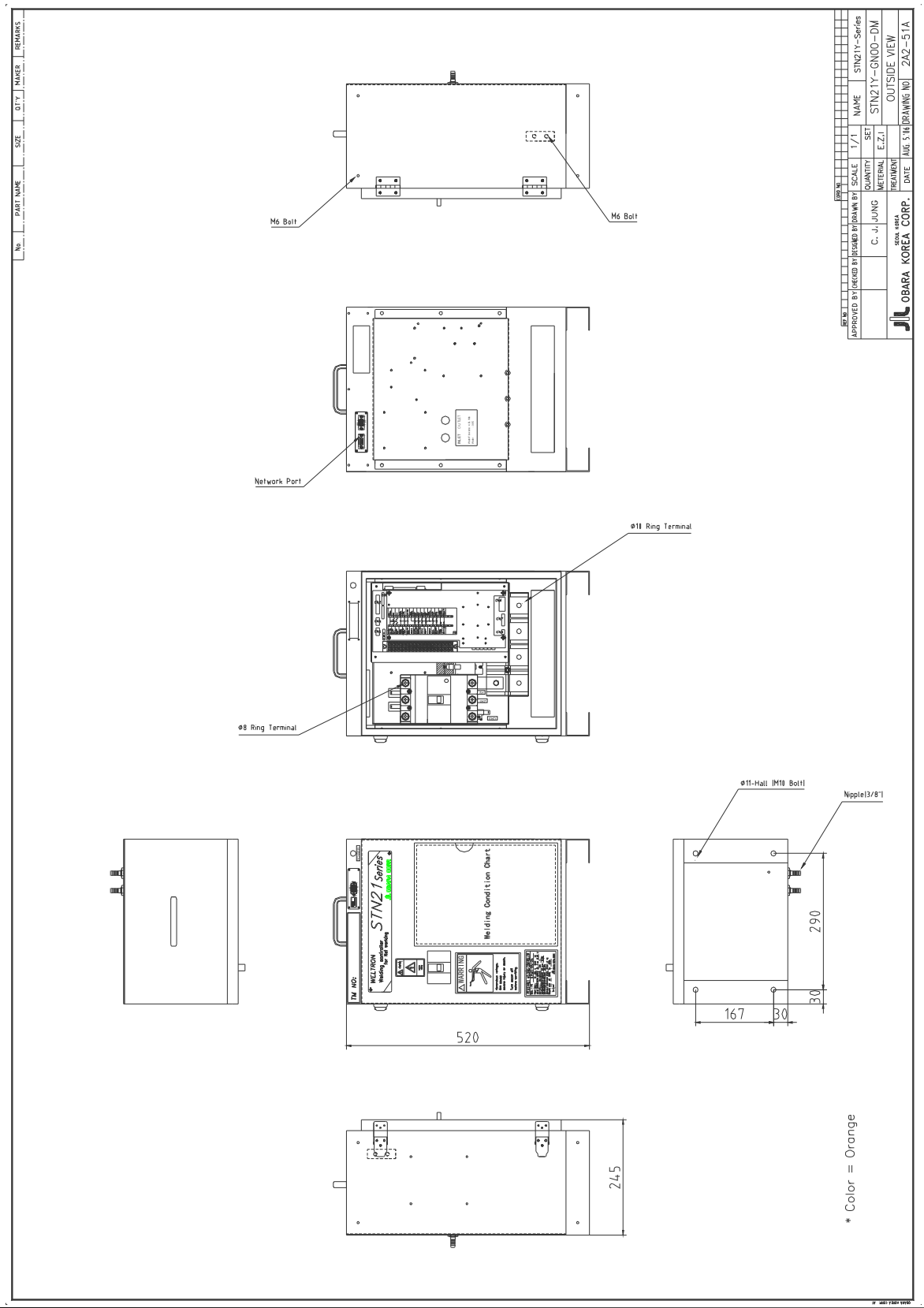

M6 Bolt
M6 Bolt
Network Port
Φ11 Ring Terminal
Φ8 Ring Terminal
Φ11-Hall (M10 Bolt)
Nipple(3/8")
STN21 Series
Welding Condition Chart
WELTRON
WARRING
520
290
30
167
30
245
* Color = Orange
STN21Y-Series
STN21Y-GN00-DM
OUTSIDE VIEW
2A2-51A
OBARA KOREA CORP.
C. J. JUNG

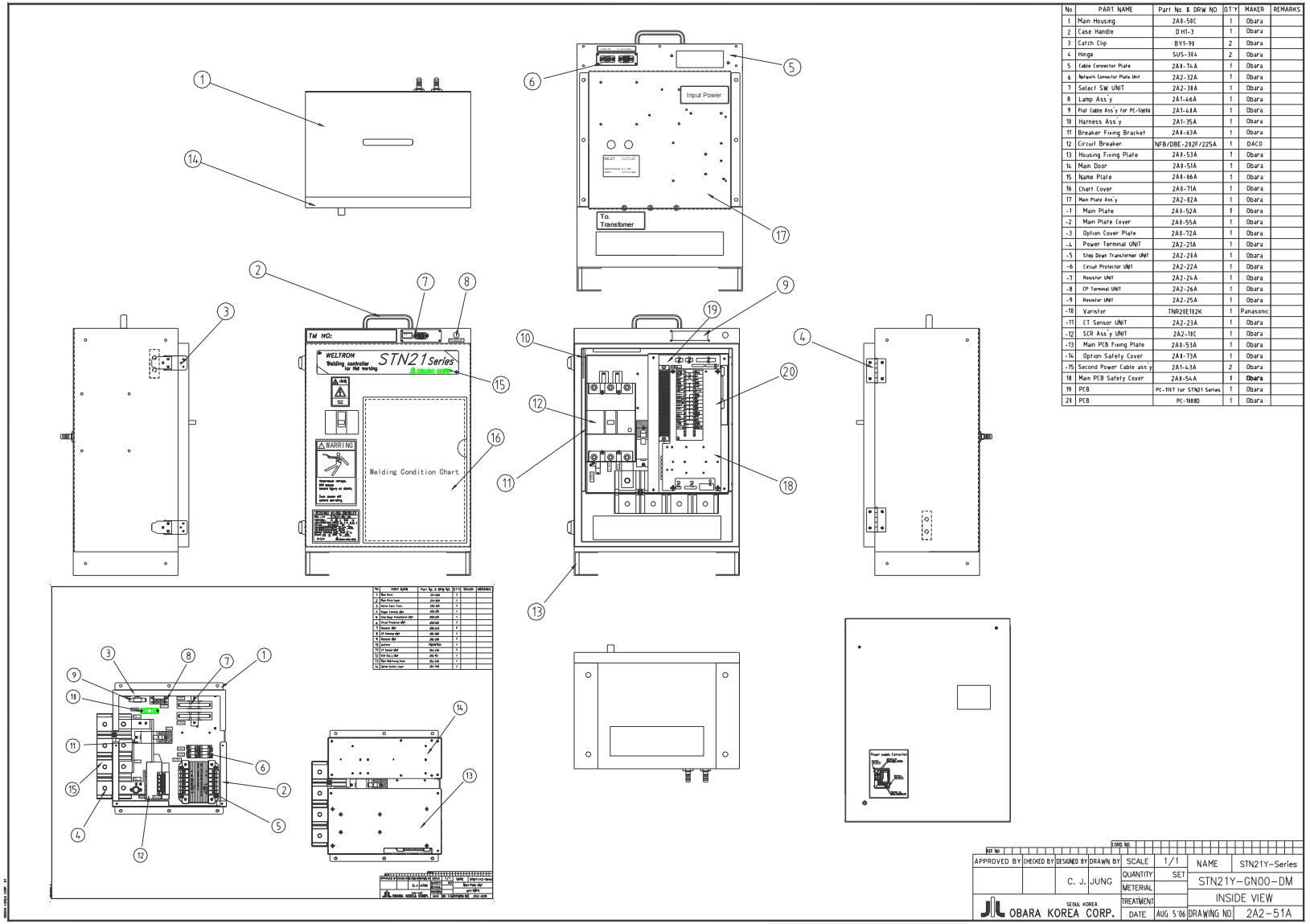

No	PART NAME	Part No & DRW NO	Q'TY	MAKER	REMARKS
1	Main Housing	2A8-58C	1	Obara	
2	Case Handle	DH1-3	1	Obara	
3	Catch Clip	BY1-98	2	Obara	
4	Hinge	SUS-304	2	Obara	
5	Cable Connector Plate	2A8-74A	1	Obara	
6	Network Connector Plate Unit	2A2-32A	1	Obara	
7	Select SW UNIT	2A2-38A	1	Obara	
8	Lamp Ass'y	2A1-46A	1	Obara	
9	Flat Cable Ass'y for PC-SW96	2A1-44A	1	Obara	
10	Harness Ass'y	2A1-35A	1	Obara	
11	Breaker Fixing Bracket	2A8-63A	1	Obara	
12	Circuit Breaker	NFB/DBE-202F/225A	1	DACO	
13	Housing Fixing Plate	2A8-53A	1	Obara	
14	Main Door	2A8-51A	1	Obara	
15	Name Plate	2A8-66A	1	Obara	
16	Chart Cover	2A8-71A	1	Obara	
17	Main Plate Ass'y	2A2-82A	1	Obara	
-1	Main Plate	2A8-52A	1	Obara	
-2	Main Plate Cover	2A8-55A	1	Obara	
-3	Option Cover Plate	2A8-72A	1	Obara	
-4	Power Terminal UNIT	2A2-21A	1	Obara	
-5	Step Down Transformer UNIT	2A2-23A	1	Obara	
-6	Circuit Protector UNIT	2A2-22A	1	Obara	
-7	Resistor UNIT	2A2-24A	1	Obara	
-8	CP Terminal UNIT	2A2-26A	1	Obara	
-9	Resistor UNIT	2A2-25A	1	Obara	
-10	Varistor	TNR20E102K	1	Panasonic	
-11	CT Sensor UNIT	2A2-23A	1	Obara	
-12	SCR Ass'y UNIT	2A2-18C	1	Obara	
-13	Main PCB Fixing Plate	2A8-53A	1	Obara	
-14	Option Safety Cover	2A8-73A	1	Obara	
-15	Second Power Cable ass'y	2A1-43A	2	Obara	
18	Main PCB Safety Cover	2A8-54A	1	Obara	
19	PCB	PC-1107 for STN21 Series	1	Obara	
20	PCB	PC-1188D	1	Obara	

APPROVED BY	CHECKED BY	DESIGNED BY	DRAWN BY	SCALE	1/1	NAME	STN21Y-Series
		C. J. JUNG		QUANTITY	SET	STN21Y-GN00-DM	
				METERIAL		INSIDE VIEW	
OBARA KOREA CORP. SEOUL KOREA				TREATMENT			
				DATE	AUG 5'06	DRAWING NO	2A2-51A

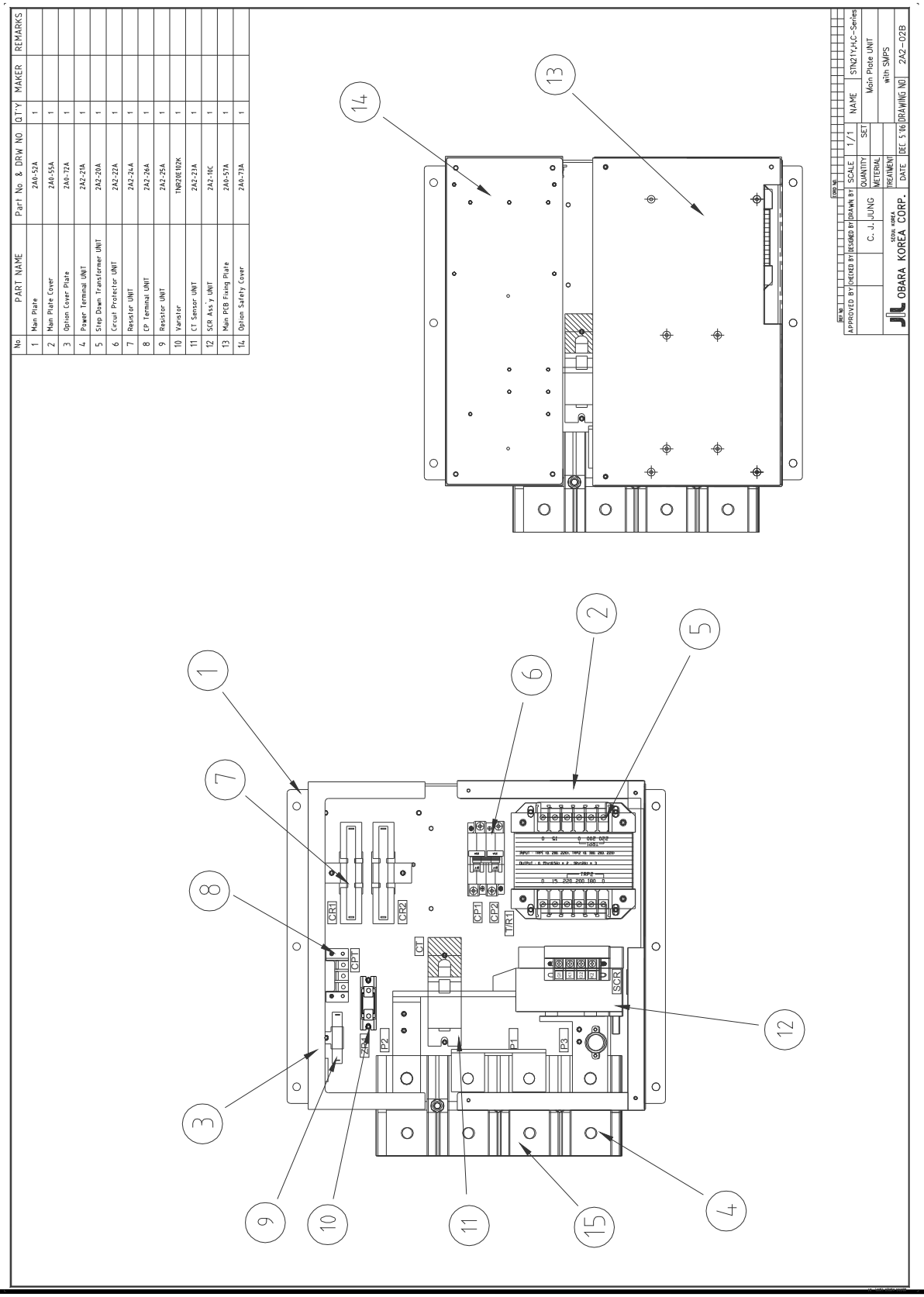
No | PART NAME | Part No & DRW NO | QTY | MAKER | REMARKS
1 | Main Plate | 2A0-52A | 1
2 | Main Plate Cover | 2A0-55A | 1
3 | Option Cover Plate | 2A0-72A | 1
4 | Power Terminal UNIT | 2A2-21A | 1
5 | Step Down Transformer UNIT | 2A2-29A | 1
6 | Circuit Protector UNIT | 2A2-22A | 1
7 | Resistor UNIT | 2A2-24A | 1
8 | CP Terminal UNIT | 2A2-26A | 1
9 | Resistor UNIT | 2A2-25A | 1
10 | Varistor | TNR20K102K | 1
11 | CT Sensor UNIT | 2A2-23A | 1
12 | SCR Ass'y UNIT | 2A2-10C | 1
13 | Main PCB Fixing Plate | 2A0-57A | 1
14 | Option Safety Cover | 2A0-73A | 1
APPROVED BY
CHECKED BY C. J. JUNG
DESIGNED BY
DRAWN BY
SCALE 1/1
QUANTITY SET
METERIAL
TREATMENT
DATE DEC 5'16
NAME STN21Y-HC-Series
Main Plate UNIT
with SNPS
DRAWING NO 2A2-02B
OBARA KOREA CORP.
SEOUL KOREA
CR1
CR2
CP1
CP2
TYR1
CT
CPT
SCR
P1
P2
P3
1
2
3
4
5
6
7
8
9
10
11
12
13
14
15

Program sheet

Timer No. Group No.

Item/Function	Desplay Letter	Setting Range	Combination of the triggered switch signal 1	2	3	4	5	6	7	8	9	A	B	C	D	E	F	
Gun Select	GunSel	1 ~ 8																1,8.11
PreSqueeze Time	PrSquez	0 ~ 99cyc																
Squeeze Time	Squeeze	1 ~ 99cyc																1
Slope Time	Slope	1 ~ 30cyc																
Weld1 Time	Weld1	0 ~ 99cyc																
Cool1 Time	Cool1	0 ~ 99cyc																
Weld2 Time	Weld2	0 ~ 99cyc																1
Down Slope Time	D.Slope	0 ~ 99cyc																
Cool2 Time	Cool2	0 ~ 99cyc																
Weld3 Time	Weld3	0 ~ 99cyc																
Hold Time	Hold	1 ~ 99cyc																1
Off Time	Off	0 or 4 ~ 99cy																3
Pulse count Number	Pulse	1 ~ 9 times																2
Heat1	Heat1	2.0 ~ 60.0kA																
Heat2	Heat2	2.0 ~ 60.0kA																1
Heat3	Heat3	2.0 ~ 60.0kA																
Turn Ratio	TurnR.	0. 1 ~ 200.0																1,9
Current Flow Rate	C.Flow+	30 ~ 100%																
Current Flow Rate Count	CF.Count	0 or 1 ~ 99times																
Max Press	MaxV.	0 ~ 9999N																5
Press Adjust	PAdjust	50 ~ 150%																5
PressT1	PresT1	0 ~ 99cyc																5
PressT2	PresT2	0 ~ 99cyc																5
PressT3	PresT3	0 ~ 99cyc																5
PressV1	PresV1	0 ~ 100%																5,6
		0 ~ 9999N																5,7
PressV2	PresV2	0 ~ 100%																5,6
		0 ~ 9999N																5,7
PressV3	PresV3	0 ~ 100%																5,6
		0 ~ 9999N																5,7
Step Up 0	Step0	50 ~ 200%																1,4,12
Step Up 1	Step1	50 ~ 200%																1,4
Step Up 2	Step2	50 ~ 200%																1,4
Step Up 3	Step3	50 ~ 200%																1,4
Step Up 4	Step4	50 ~ 200%																1,4
Step Up 5	Step5	50 ~ 200%																1,4
Step Up 6	Step6	50 ~ 200%																1,4
Step Up 7	Step7	50 ~ 200%																1,4
Step Up 8	Step8	50 ~ 200%																1,4
Step Up 9	Step9	50 ~ 200%																1,4
Step Up 10	Step10	50 ~ 200%																1,4
Step Up 11	Step11	50 ~ 200%																1,4
Step Up 12	Step12	50 ~ 200%																1,4
Step Up 13	Step13	50 ~ 200%																1,4
Step Up 14	Step14	50 ~ 200%																1,4
Step Up 15	Step15	50 ~ 200%																1,4
Step Up 16	Step16	50 ~ 200%																1,4,13

GUN No.			1	2	3	4	5	6	7	8	
Step Count 1	Count 1	0 ~ 9999									14.10
Step Count 2	Count 2	0 ~ 9999									14.10
Step Count 3	Count 3	0 ~ 9999									14.10
Step Count 4	Count 4	0 ~ 9999									14.10
Step Count 5	Count 5	0 ~ 9999									14.10
Step Count 6	Count 6	0 ~ 9999									14.10
Step Count 7	Count 7	0 ~ 9999									14.10
Step Count 8	Count 8	0 ~ 9999									14.10
Step Count 9	Count 9	0 ~ 9999									14.10
Step Count 10	Count 10	0 ~ 9999									14.10
Step Count 11	Count 11	0 ~ 9999									14.10
Step Count 12	Count 1 2	0 ~ 9999									14.10
Step Count 13	Count 1 3	0 ~ 9999									14.10
Step Count 14	Count 1 4	0 ~ 9999									14.10
Step Count 15	Count 1 5	0 ~ 9999									14.10
Step Count 16	Count 1 6	0 ~ 9999									14.10.13

Common Data				
Step return location	Step Return	1 ~ 5(max)		1,4
Current Low Limet	Curr.Low	50-100%		1
Current High Limit	Curr.Hig	100-150%		1
Hold Delay	HoldDely	0-99cyc		1
PeK Current Limit	PeakCurr	100-200%		1

Note1. Only 12 items are displayed when parameter DispLevel "1" is selected.
Note2. Not displayed when parameter Pulse Sel."OFF" is selected.
Note3. Not displayed when parameter RepeatSel."OFF" is selected.
Note4. Not displayed when parameter Step Type "0" is selected.
Note5. Not displayed when parameter VP Mode "0" is selected.
Note8. The biggest number is to be same as the last digit of the parameter Gun Sel.
Note9. Display alarm"ill.Data" when parameter TurnR. is "0".
Note10. Only group num. "0" is available because only one group exists.
Note11. Not displayed when parameter Gun assignment select."OFF" is selected.
Note12. Correspondence only in case of "Liner-up" controll.

Note6. % to be set when parameter VP Mode is "1".
Note7. To be set when parameter VP Mode is "2".

Note13. Correspondence only in case of "Step-up" controll.

Parameter Sheet

Timer No.

Item/Function	Display Letter	Setting Range/Information	Parameter value
Pulsation Select	P1 Pulse. Sel.	ON :Enable OFF :Disable	
A or B Mode Select	P2 AB Mode	ON :A Mode OFF :B Mode	
Alarm signal NO/NC select	P3 ALM Out	ON :Normal Open OFF :Normal Close	
Trigger start	P4 One Shoot	ON :Enable OFF :Disable	
Hold End signal select	P5 Hold Out	ON :Enable OFF :Disable	
Hold End Delay Job section at alarm signal	P6 HoldA Dly	ON :Enable OFF :Disable	
Alarm output signal select	P7 ALM Mode	0 :Alarm pulse output enable 1 :Alarm constant output enable 2 :Alarm constant output & weld stop 3 :Skip alarm output	
Max. Step Up series select	P8 Step Type	0 :Disable 1 :Max. gun series 2 :4/15 series	
Trigger SW priority select	P9 Sw mode	ON :Trigger SW priority select OFF :Weld sequence priority select	
Japanese or English display select	Pa Japanese	ON: Japanese OFF: English	
Transformer turn ratio series select	Pb TransType	0: 1 series 1: Max. gun series 2: 4/15 series	
Repeat action select	Pc RepeatSel.	ON :Enable OFF :Disable	
Reweld action select at current low detected	Pd Reweld	ON :Enable OFF :Disable	
Pressure adjustment select	Pe VP Mode	0 :Disable 1 :%Setting enable 2 :Direct number setting enable 3 :Direct number setting enable, and display only setting	
Pressure adjustment control voltage select	Pf VP Type	0 :control range 0-5V :control range:0-10V	
caution output select	Pg Caution	ON :Enable OFF :Disable	
Transformer thermostat check sequence	Ph Gun Chang.	ON :Enable(Check at weld start) OFF :Disable(Always check)	
Alarm output signal select on No-weld sequence	Pi TestW ALM	ON :Alarm output signal enable OFF :Alarm output signal disable	
Max. Gun num. select Retract select Valve selector select Weld interlock select	Pj Gun Sel.	00~08: Max. SOL valve select 11~18: Retract enable 21~28: Reverse wire Retract enable 31~38: Valve selector enable 41~48: Weld interlock enable 51~58: Retract & Retract interlock enable 61~68: Reverse wire Retract & Retract interlock enable	
Step Up Max. value select	Pk Max Step	2~16: Step Up max. number select	
Display level select	PL DispLevel	0: Display all function 1: Display limited function 2: Display limited to 1group 3: Display limited to 4group	
Step-dawn transformer	Pm Ref. Volt	0: 200V line voltage set 1: 220V line voltage set 2: 380V line voltage set 3: 400V line voltage set 4: 420V line voltage set 5: 440V line voltage set 6: 460V line voltage set 7: 480V line voltage set	
Weld enable/disable select	Pn Test Mode	0: Weld enable (standard) 1: Weld disable 2: Weld disable & sol. valve control 3: Cable short check enable 4: Cable short check enable2	
Timer number select	Po TM Number	0~99: Timer Number set	
Gun assignment select	Pp GunNumFix	ON: Fixed to GUN1 in odd-numbered series Fixed to GUN2 in even-numbered series OFF: Can be set to any number.	
Remote I/O select	Pq RemortI/O	ON :Enable(For DeviceNet) OFF :Disable	
Current detection signal output selection	P r CurDetect	ON: Enable OFF: Disable	
Step up Finish 2 series output selection	P s StepF2out	ON: Enable OFF: Disable	
Step liner up	Pv Liner up	ON: Liner-up control OFF: Step-up control	